REV	REVISION	DATE	ECN	NAME	CHKD
B-1	RELEASE TO PRODUCTION	11/07/11	22545	CHR	DMS
H-1	ADDED GROUND TERMINAL BLOCKS	04/23/25	PXEC0688	JRD	WMM
J-1	ADDED PLEX ISOLATION	07/02/25	PXEC0639	SEK	WMM

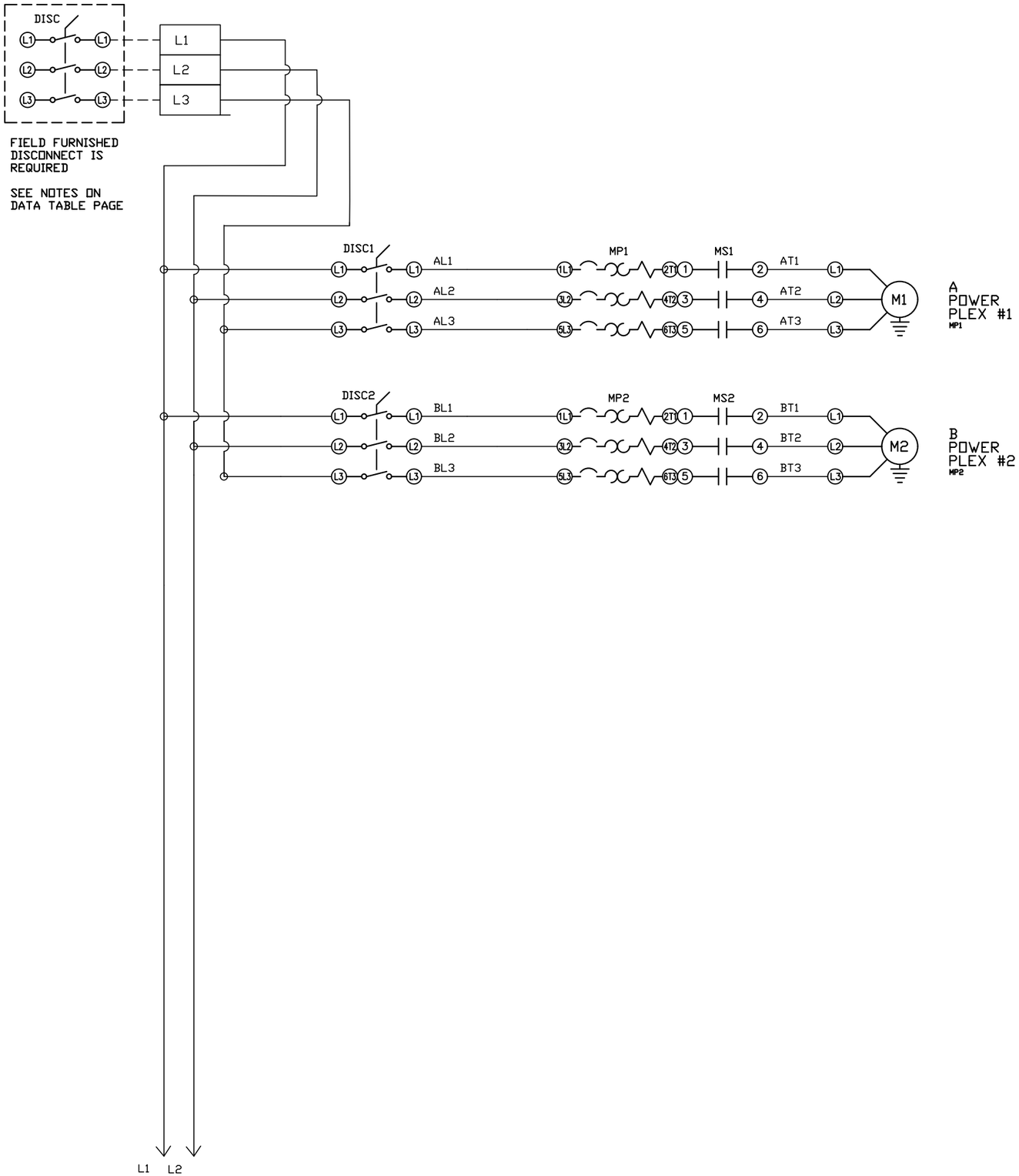

OPTIONAL:

POWEREX™

CONFIDENTIAL DISCLOSURE:
This drawing is the property of POWEREX, INC. of the SCOTT FETZER COMPANY and subject to return on demand. Its contents are confidential and must not be copied or submitted to outside parties for use or examination.

DRAWN BY	CHECKED BY	ENGINEERING APPROVAL
CHR	DMS	DMS
07/20/11	11/07/11	11/07/11

PANEL TYPE

MED AIR DUPLEX
HMI, NFPA

DWG. TYPE WIRING

DWG. NO.

PXMI-A216 W

SHEET W-1

SIZE B

PXMI-A216 B1

REV	REVISION	DATE	ECN	NAME	CHKD
B-1	RELEASE TO PRODUCTION	11/07/11	22545	CHR	DMS
H-1	ADDED GROUND TERMINAL BLOCKS	04/23/25	PXEC0688	JRD	WMM
J-1	ADDED PLEX ISOLATION	07/02/25	PXEC0639	SEK	WMM

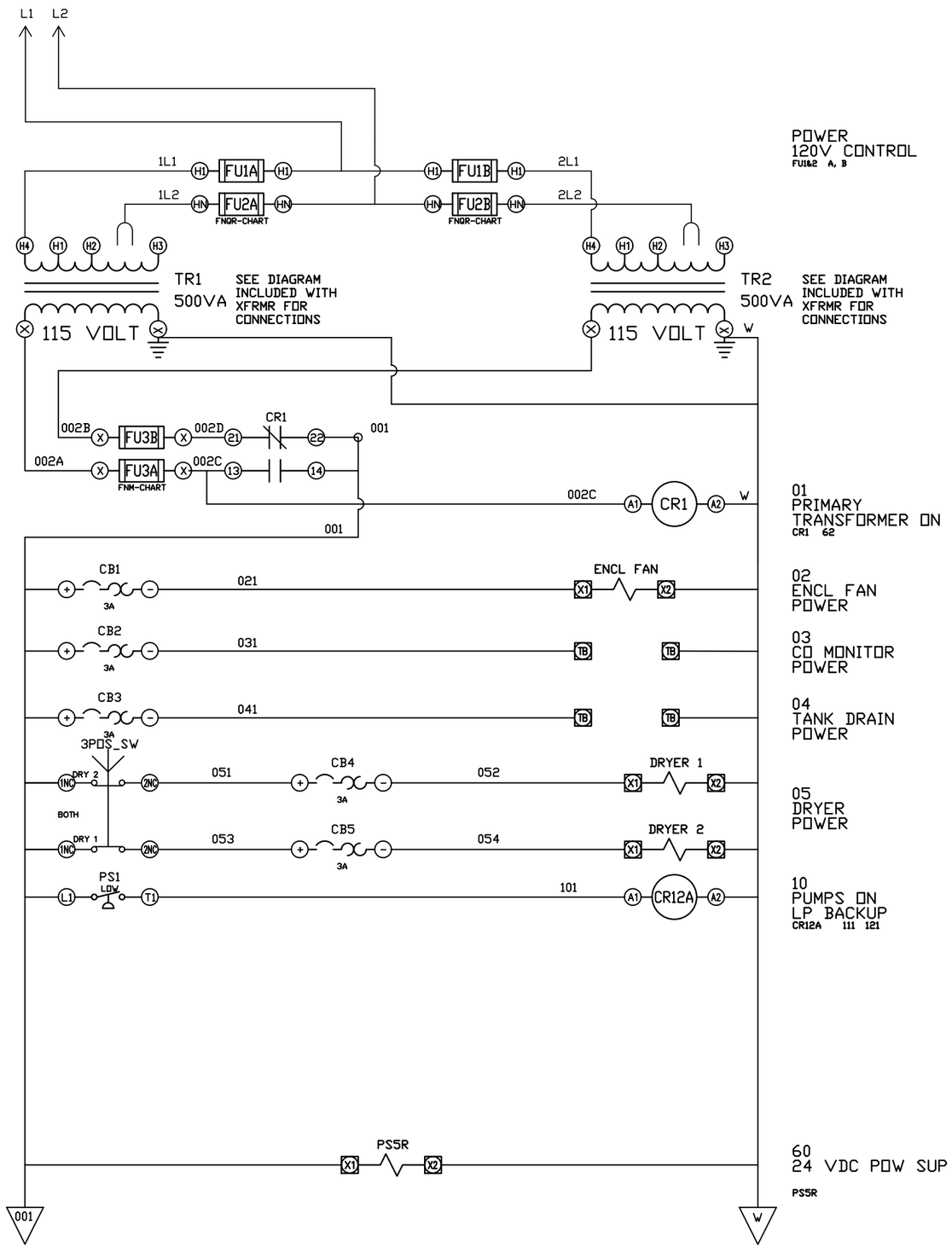

OPTIONAL:

POWEREX™

CONFIDENTIAL DISCLOSURE:
This drawing is the property of POWEREX, INC. of the SCOTT FETZER COMPANY and subject to return on demand. Its contents are confidential and must not be copied or submitted to outside parties for use or examination.

DRAWN BY	CHECKED BY	ENGINEERING APPROVAL
CHR	DMS	DMS
07/20/11	11/07/11	11/07/11

PANEL TYPE

MED AIR DUPLEX
HMI, NFPA

DWG. TYPE WIRING

DWG. NO.

PXMI-A216 W

SHEET W-2

SIZE B

PXMI-A216 B1

REV	REVISION	DATE	ECN	NAME	CHKD
B-1	RELEASE TO PRODUCTION	07/20/11	22545	CHR	DMS
H-1	ADDED GROUND TERMINAL BLOCKS	04/23/25	PXEC0688	JRD	WMM
J-1	ADDED PLEX ISOLATION	07/02/25	PXEC0639	SEK	WMM

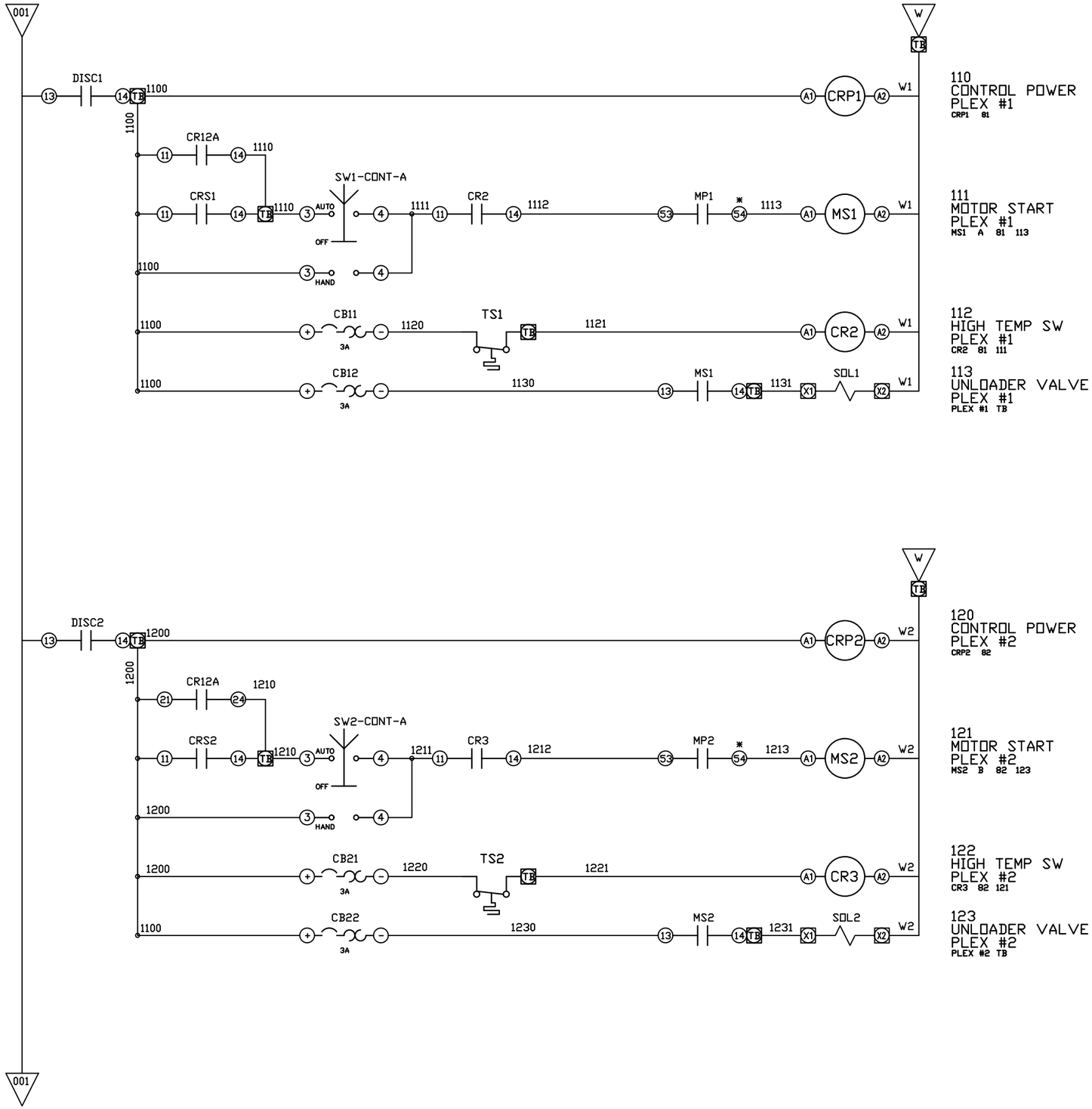

* FOR LAYOUT-B MOTOR PROTECTORS
USE PINS #1 AND #4 ON AUX CONTACTS

OPTIONAL:

POWEREX™

CONFIDENTIAL DISCLOSURE:
This drawing is the property of POWEREX, INC. of the SCOTT FETZER COMPANY and subject to return on demand. Its contents are confidential and must not be copied or submitted to outside parties for use or examination.

DRAWN BY	CHECKED BY	ENGINEERING APPROVAL
CHR	DMS	DMS
07/20/11	11/07/11	11/07/11

PANEL TYPE

MED AIR DUPLEX
HMI, NFPA

DWG. TYPE WIRING

DWG. NO.

PXMI-A216 W

SHEET W-3

SIZE B

PXMI-A216 B1

REV	REVISION	DATE	ECN	NAME	CHKD
B-1	RELEASE TO PRODUCTION	11/07/11	22545	CHR	DMS
H-1	ADDED GROUND TERMINAL BLOCKS	04/23/25	PXEC0688	JRD	WMM
J-1	ADDED PLEX ISOLATION	07/02/25	PXEC0639	SEK	WMM

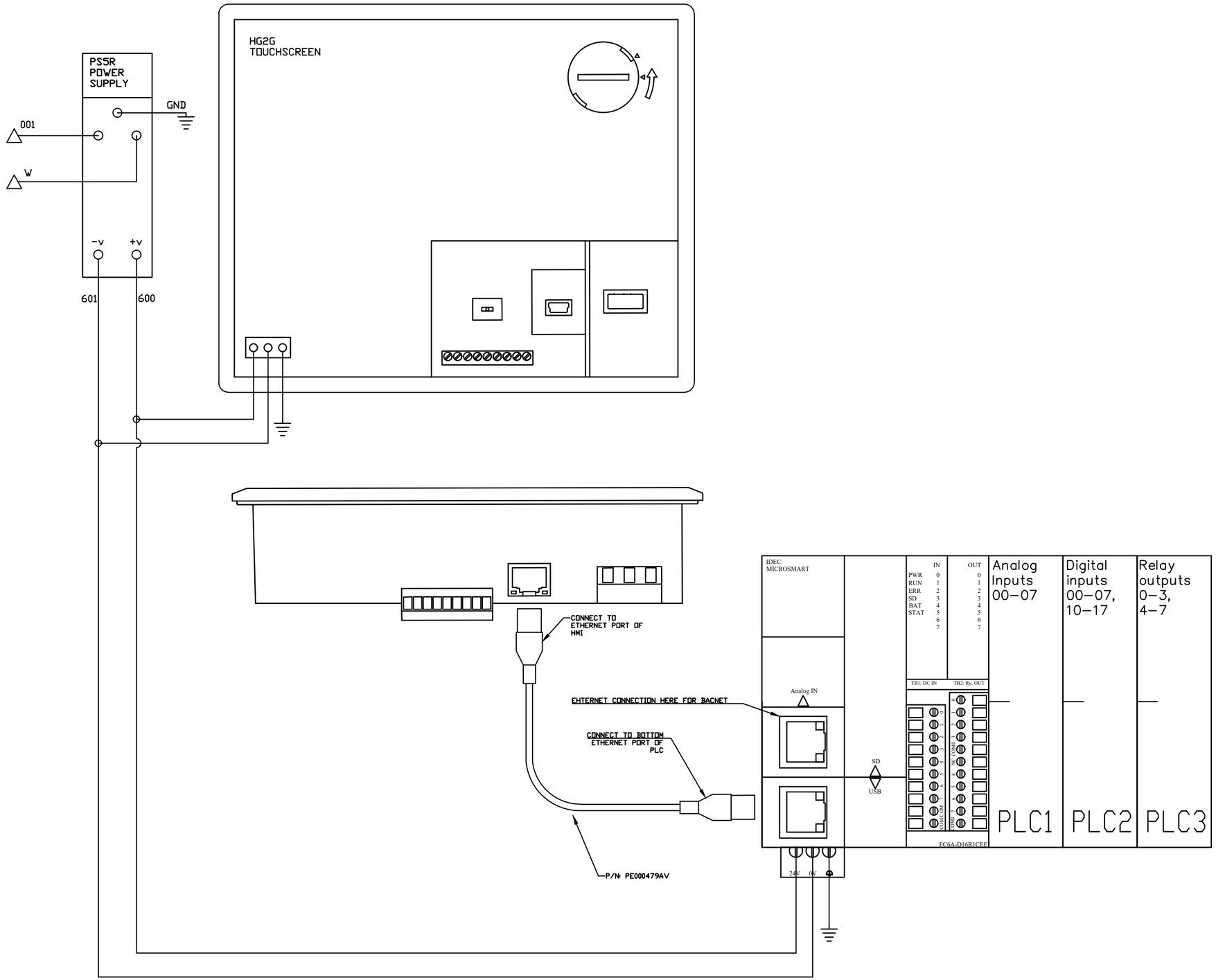

OPTIONAL:

POWEREX™

CONFIDENTIAL DISCLOSURE:
This drawing is the property of POWEREX, INC. of the SCOTT FETZER COMPANY and subject to return on demand. Its contents are confidential and must not be copied or submitted to outside parties for use or examination.

DRAWN BY	CHECKED BY	ENGINEERING APPROVAL
CHR	DMS	DMS
07/20/11	11/07/11	11/07/11

PANEL TYPE

MED AIR DUPLEX
HMI, NFPA

DWG. TYPE WIRING

DWG. NO.

PXMI-A216 W

SHEET W-4

SIZE B

PXMI-A216 B1

REV	REVISION	DATE	ECN	NAME	CHKD
B-1	RELEASE TO PRODUCTION	11/07/11	22545	CHR	DMS
H-1	ADDED GROUND TERMINAL BLOCKS	04/23/25	PXEC0688	JRD	WMM
J-1	ADDED PLEX ISOLATION	07/02/25	PXEC0639	SEK	WMM

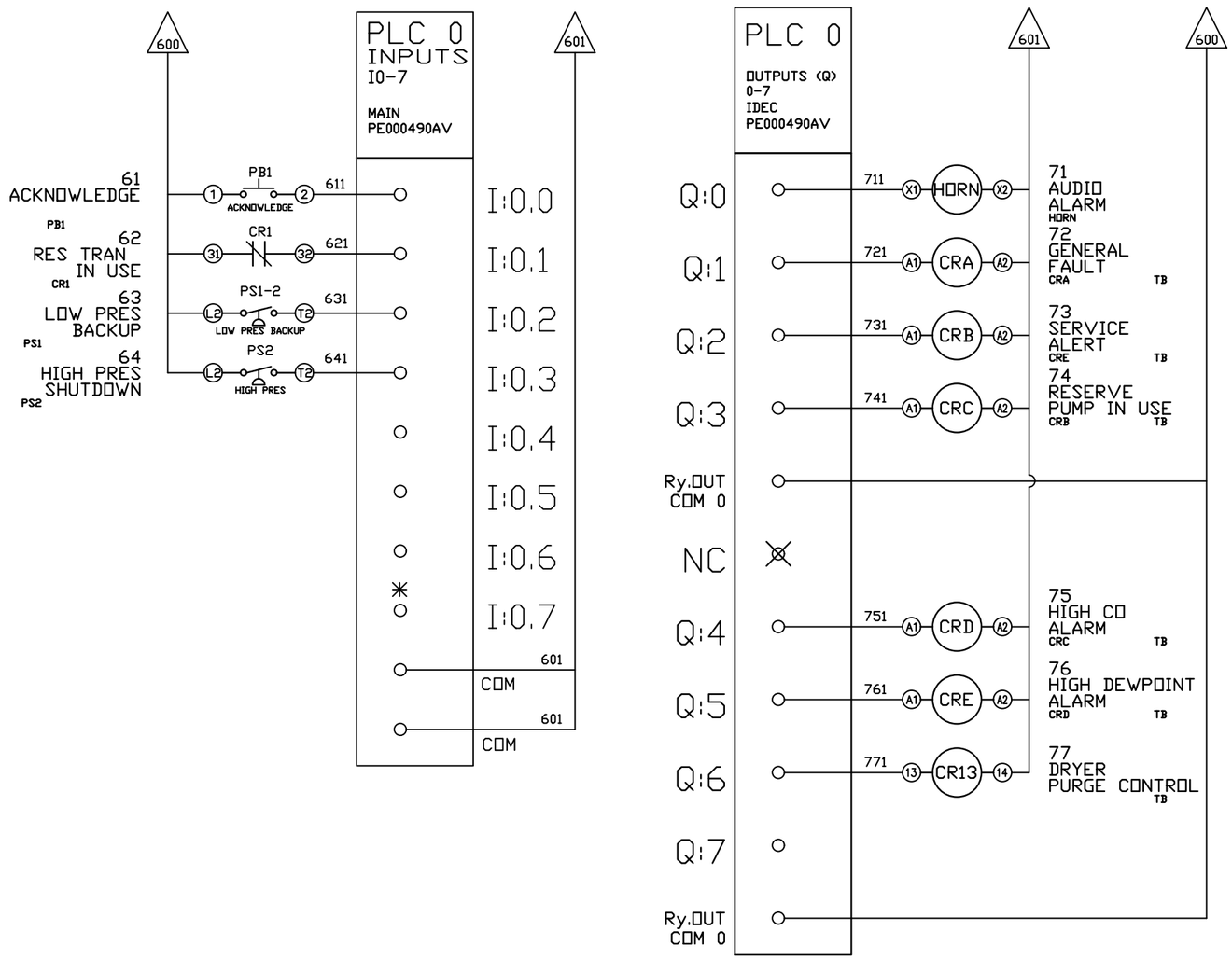

*FACTORY TEST JUMPER LOCATION

OPTIONAL:

POWEREX™

CONFIDENTIAL DISCLOSURE:
This drawing is the property of POWEREX, INC. of the SCOTT FETZER COMPANY and subject to return on demand. Its contents are confidential and must not be copied or submitted to outside parties for use or examination.

DRAWN BY	CHECKED BY	ENGINEERING APPROVAL
CHR	DMS	DMS
07/20/11	11/07/11	11/07/11

PANEL TYPE

MED AIR DUPLEX
HMI, NFPA

DWG. TYPE WIRING

DWG. NO.

PXMI-A216 W

SHEET W-5

SIZE B

PXMI-A216 B1

REV	REVISION	DATE	ECN	NAME	CHKD
B-1	RELEASE TO PRODUCTION	11/07/11	22545	CHR	DMS
H-1	ADDED GROUND TERMINAL BLOCKS	04/23/25	PXEC0688	JRD	WMM
J-1	ADDED PLEX ISOLATION	07/02/25	PXEC0639	SEK	WMM

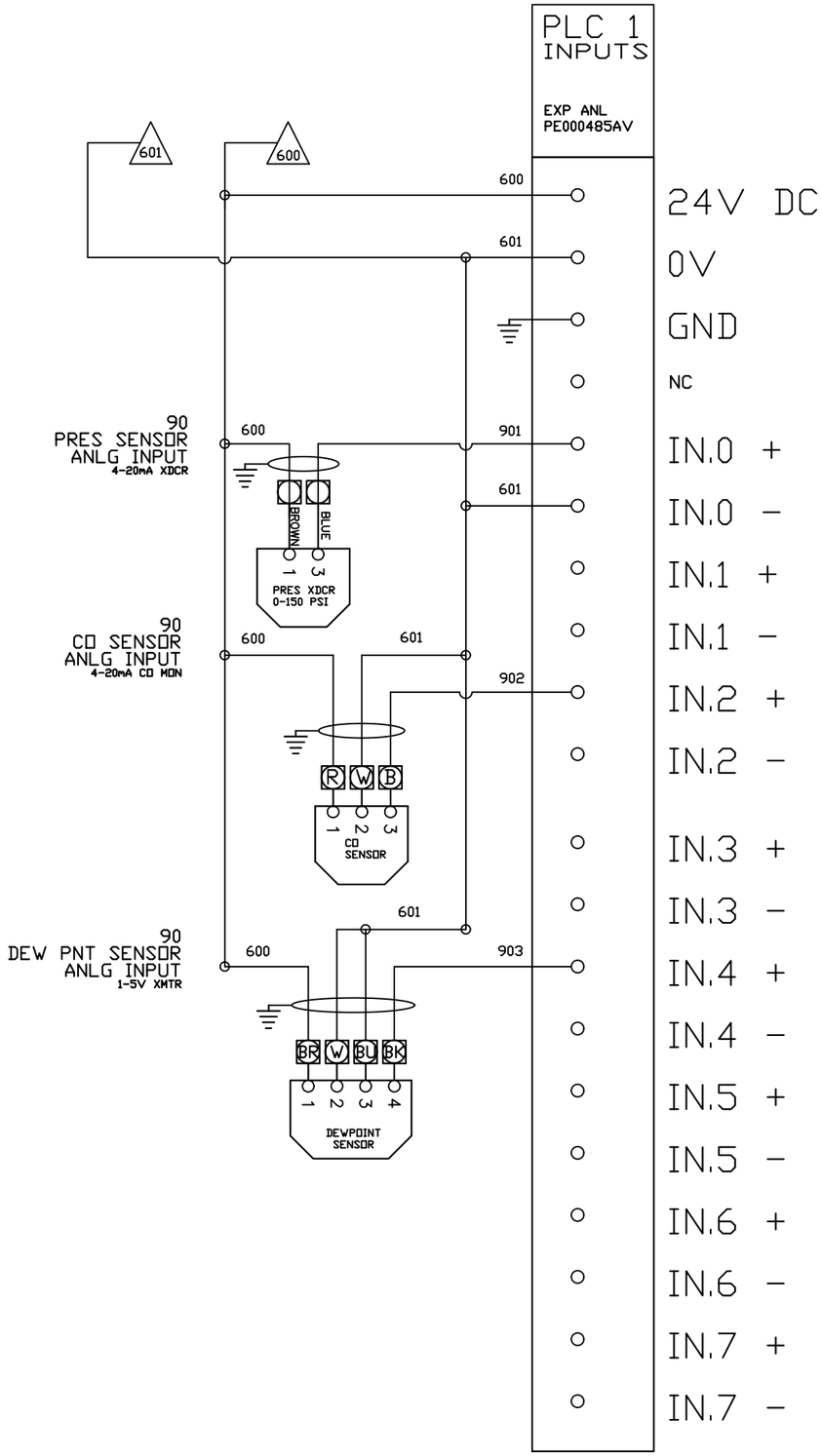

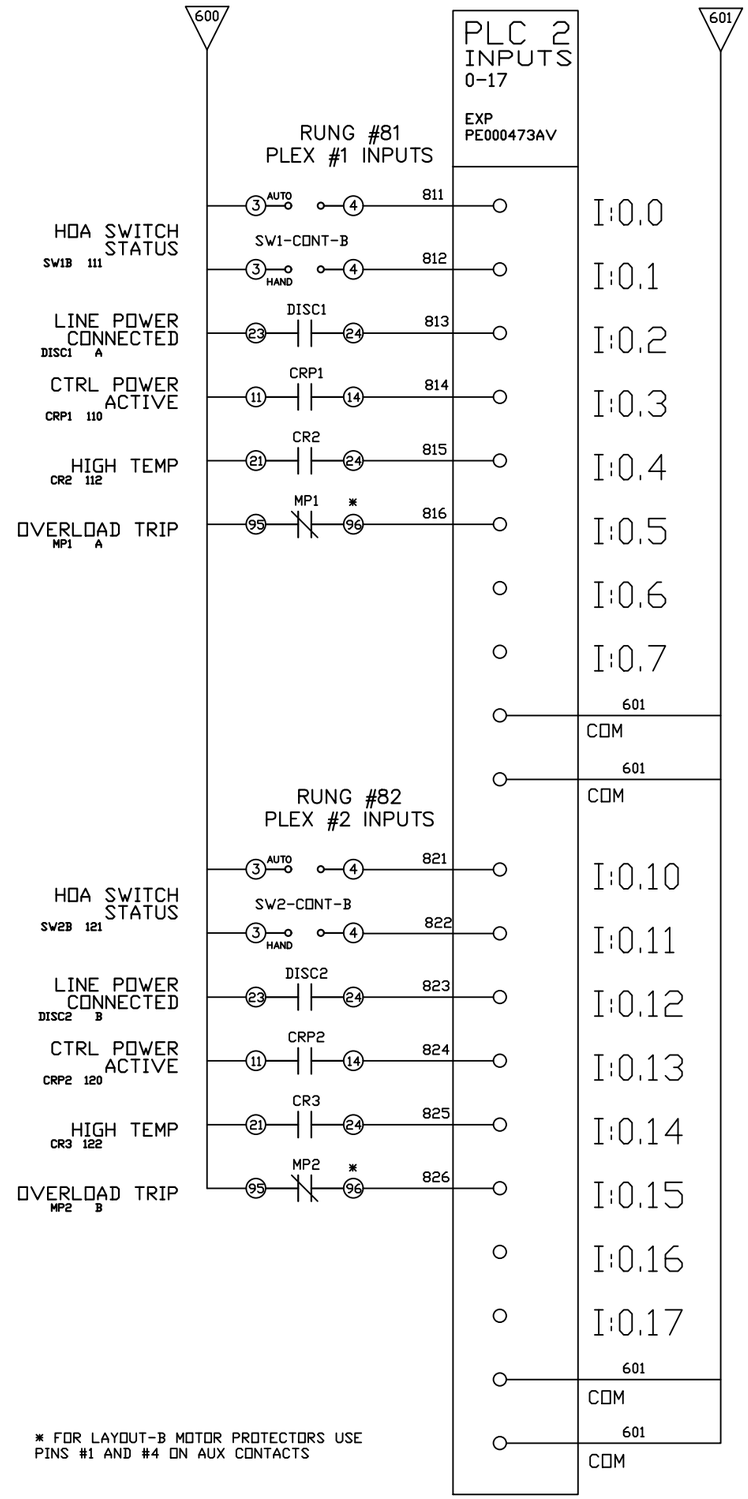

* FOR LAYOUT-B MOTOR PROTECTORS USE PINS #1 AND #4 ON AUX CONTACTS

OPTIONAL:

POWEREX™

CONFIDENTIAL DISCLOSURE:
This drawing is the property of POWEREX, INC. of the SCOTT FETZER COMPANY and subject to return on demand. Its contents are confidential and must not be copied or submitted to outside parties for use or examination.

DRAWN BY	CHECKED BY	ENGINEERING APPROVAL
CHR	DMS	DMS
07/20/11	11/07/11	11/07/11

PANEL TYPE
MED AIR DUPLEX
HMI, NFPA

DWG. TYPE WIRING

DWG. NO.
PXMI-A216 W

SHEET W-6

SIZE B

PXMI-A216 B1

REV	REVISION	DATE	ECN	NAME	CHKD
B-1	RELEASE TO PRODUCTION	11/07/11	22545	CHR	DMS
H-1	ADDED GROUND TERMINAL BLOCKS	04/23/25	PXEC0688	JRD	WMM
J-1	ADDED PLEX ISOLATION	07/02/25	PXEC0639	SEK	WMM

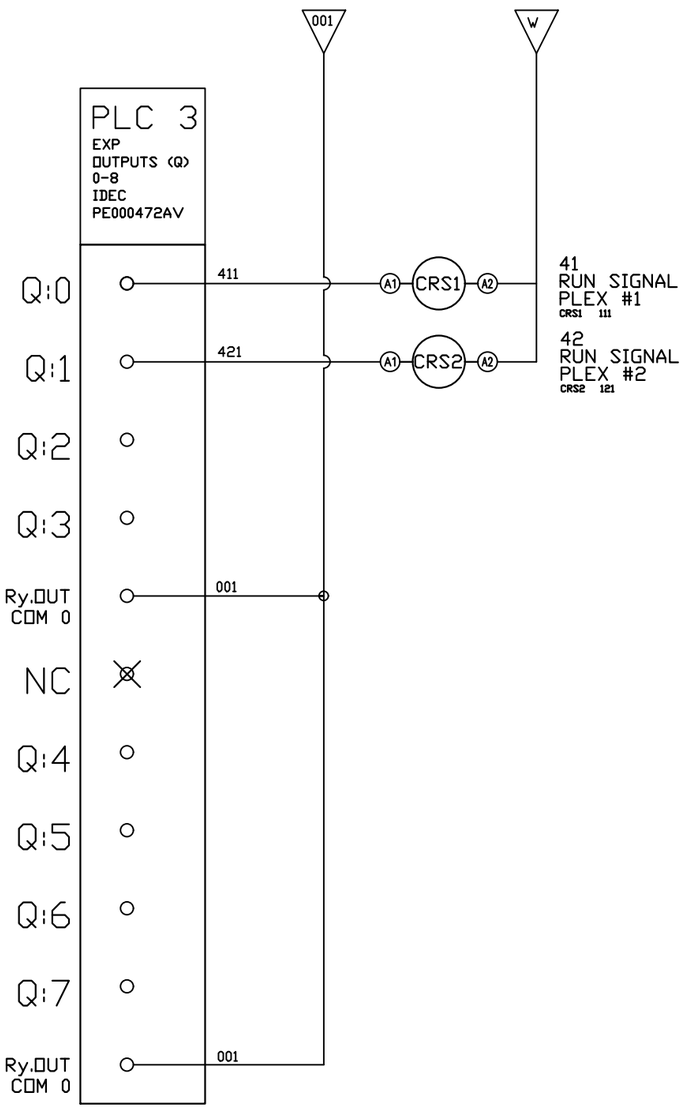

OPTIONAL:

POWEREX™

CONFIDENTIAL DISCLOSURE:
This drawing is the property of POWEREX, INC. of the SCOTT FETZER COMPANY and subject to return on demand. Its contents are confidential and must not be copied or submitted to outside parties for use or examination.

DRAWN BY	CHECKED BY	ENGINEERING APPROVAL
CHR	DMS	DMS
07/20/11	11/07/11	11/07/11

PANEL TYPE

MED AIR DUPLEX
HMI, NFPA

DWG. TYPE WIRING

DWG. NO.

PXMI-A216 W

SHEET W-7

SIZE B

PXMI-A216 B1

REV	REVISION	DATE	ECN	NAME	CHKD
B-1	RELEASE TO PRODUCTION	11/07/11	22545	CHR	DMS
H-1	ADDED GROUND TERMINAL BLOCKS	04/23/25	PXEC0688	JRD	WMM
J-1	ADDED PLEX ISOLATION	07/02/25	PXEC0639	SEK	WMM

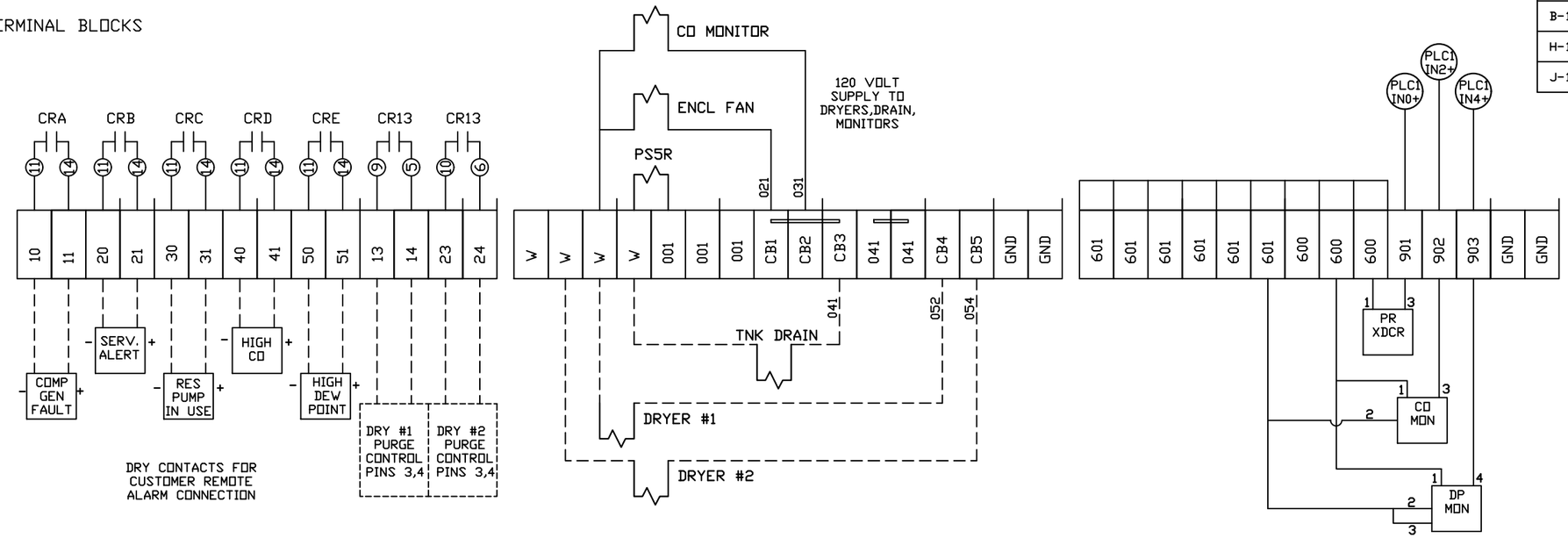

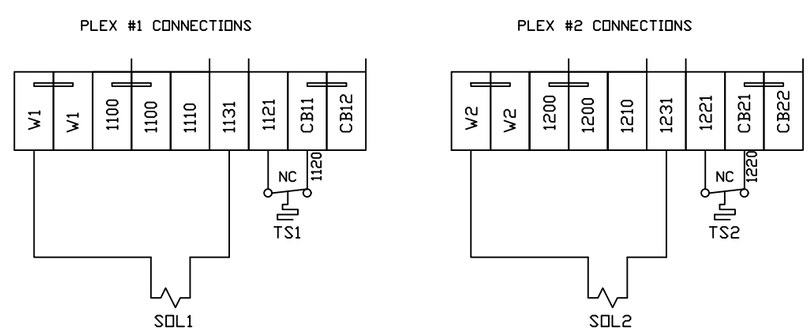

FIELD WIRING NOTES:

- PANEL GROUND MUST BE CONNECTED TO EARTH GROUND
- TRANSFORMER IS SIZED FOR LOADS SHOWN ON DRAWING ONLY.
- FIELD WIRING INDICATED BY ----------, WIRE TO BE COPPER RATED AT 75° C.
- ALL ALARM DRY CONTACTS ARE CLOSED FOR NORMAL OPERATION AND OPEN IN ALARM.
- DRY CONTACT RATING: 30V DC/2A (resistive load, inductive load L/R = 7 ms)
- USE CAT-5 CABLE W/RJ45 CONNECTOR FOR ETHERNET CONNECTION TO COMMUNICATION NETWORK OR BAS SYSTEM

OPTIONAL:

POWEREX™

CONFIDENTIAL DISCLOSURE:
This drawing is the property of POWEREX, INC. of the SCOTT FETZER COMPANY and subject to return on demand. Its contents are confidential and must not be copied or submitted to outside parties for use or examination.

DRAWN BY	CHECKED BY	ENGINEERING APPROVAL
CHR	DMS	DMS
07/20/11	11/07/11	11/07/11

PANEL TYPE

MED AIR DUPLEX
HMI, NFPA

DWG. TYPE WIRING

DWG. NO.

PXMI-A216 W

SHEET W-8

SIZE B

PXMI-A216 B1

REV	REVISION	DATE	ECN	NAME	CHKD
B-1	RELEASE TO PRODUCTION	11/07/11	22545	CHR	DMS
H-1	ADDED GROUND TERMINAL BLOCKS	04/23/25	PXEC0688	JRD	WMM
J-1	ADDED PLEX ISOLATION	07/02/25	PXEC0639	SEK	WMM

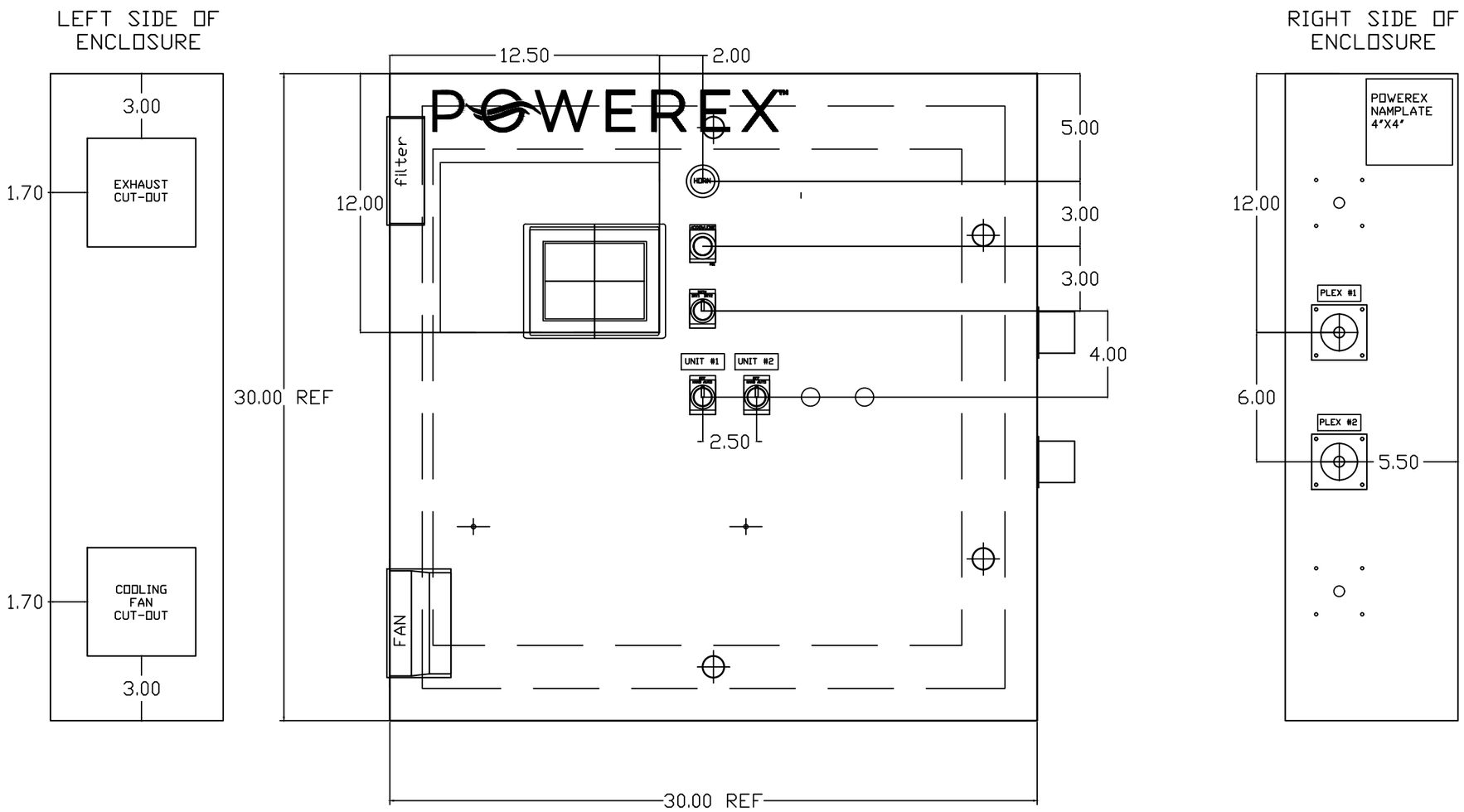

OPTIONAL:

POWEREX

CONFIDENTIAL DISCLOSURE:
This drawing is the property of POWEREX, INC. of the SCOTT FETZER COMPANY and subject to return on demand. Its contents are confidential and must not be copied or submitted to outside parties for use or examination.

DRAWN BY	CHECKED BY	ENGINEERING APPROVAL
CHR	DMS	DMS
07/20/11	11/07/11	11/07/11

PANEL TYPE

MED AIR DUPLEX
HMI, BACNET, WEBSRVR, NFPA

DWG. TYPE LAYOUT A

DWG. NO.

PXMI-A216 W

SHEET LA-1

SIZE B

PXMI-A216 B1

REV	REVISION	DATE	ECN	NAME	CHKD
B-1	RELEASE TO PRODUCTION	11/07/11	22545	CHR	DMS
H-1	ADDED GROUND TERMINAL BLOCKS	04/23/25	PXEC0688	JRD	WMM
J-1	ADDED PLEX ISOLATION	07/02/25	PXEC0639	SEK	WMM

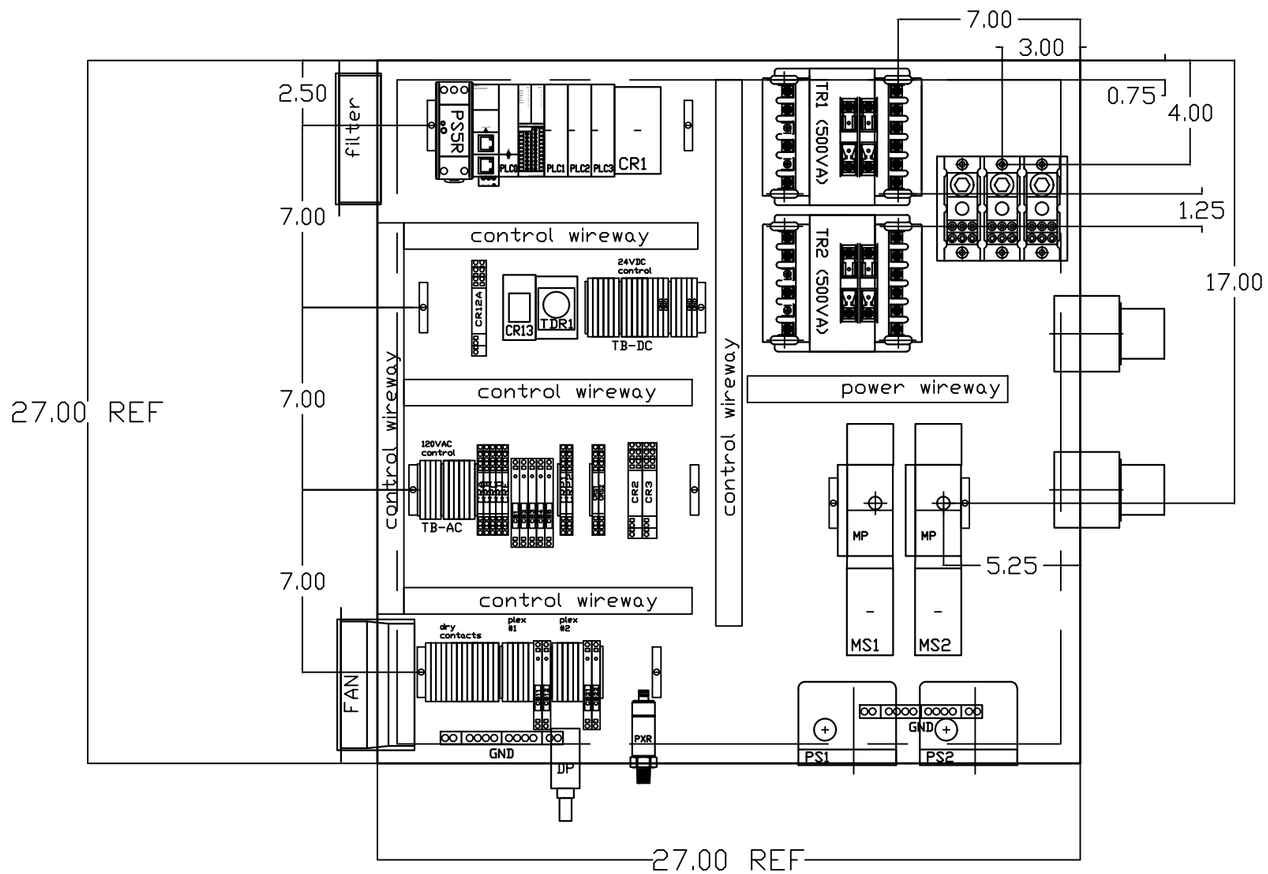

OPTIONAL:

POWEREX™

CONFIDENTIAL DISCLOSURE:
This drawing is the property of POWEREX, INC. of the SCOTT FETZER COMPANY and subject to return on demand. Its contents are confidential and must not be copied or submitted to outside parties for use or examination.

DRAWN BY	CHECKED BY	ENGINEERING APPROVAL
CHR	DMS	DMS
07/20/11	11/07/11	11/07/11

PANEL TYPE

MED AIR DUPLEX
HMI, NFPA

DWG. TYPE LAYOUT A

DWG. NO.

PXMI-A216 W

SHEET LA-2

SIZE B

PXMI-A216 B1

REV	REVISION	DATE	ECN	NAME	CHKD
B-1	RELEASE TO PRODUCTION	11/07/11	22545	CHR	DMS
H-1	ADDED GROUND TERMINAL BLOCKS	04/23/25	PXEC0688	JRD	WMM
J-1	ADDED PLEX ISOLATION	07/02/25	PXEC0639	SEK	WMM

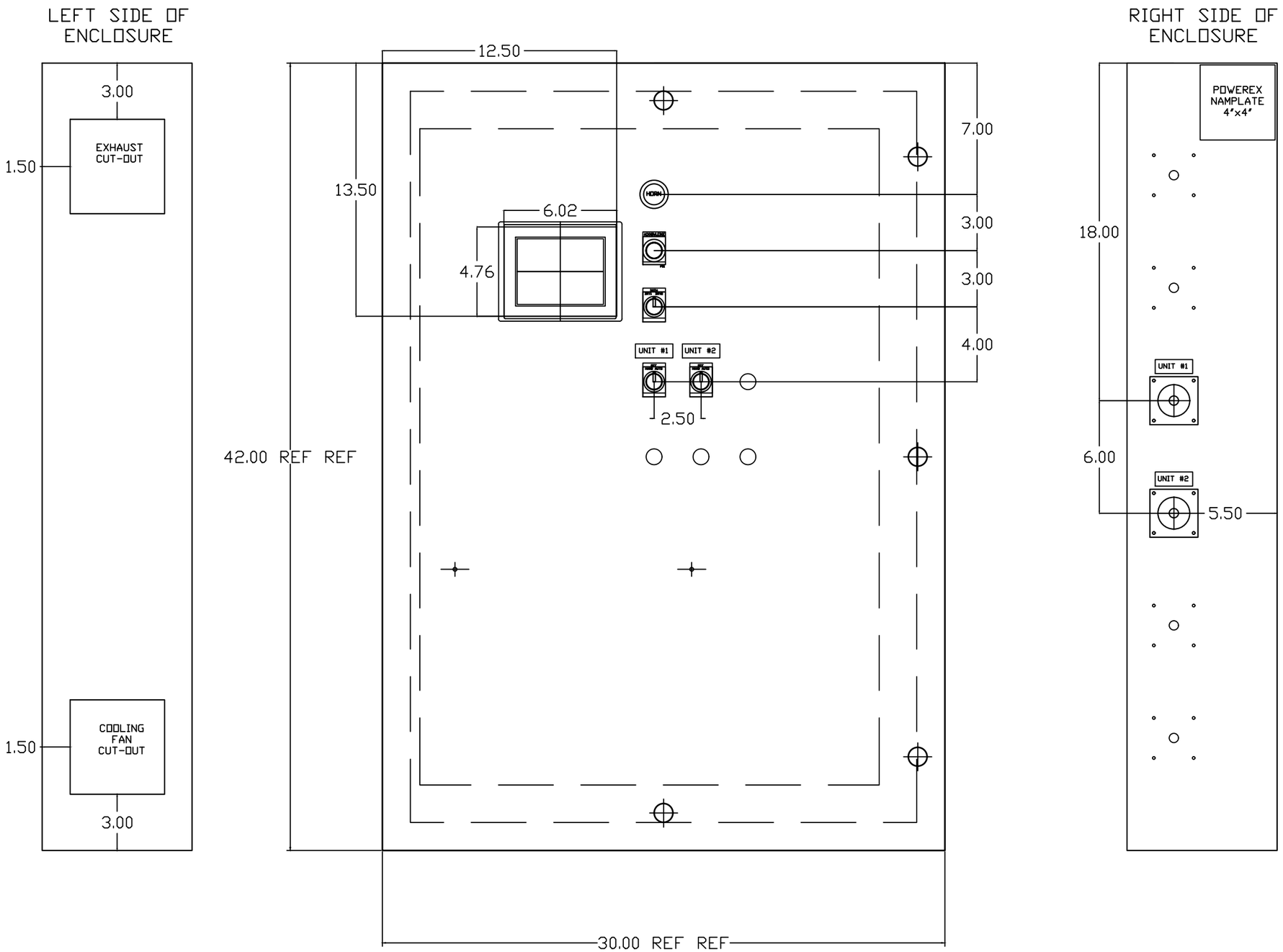

OPTIONAL:

POWEREX™

CONFIDENTIAL DISCLOSURE:
This drawing is the property of POWEREX, INC. of the SCOTT FETZER COMPANY and subject to return on demand. Its contents are confidential and must not be copied or submitted to outside parties for use or examination.

DRAWN BY	CHECKED BY	ENGINEERING APPROVAL
CHR	DMS	DMS
07/20/11	11/07/11	11/07/11

PANEL TYPE

MED AIR DUPLEX
HMI, NFPA

DWG. TYPE LAYOUT B

DWG. NO.

PXMI-A216 W

SHEET LB-1

SIZE B

PXMI-A216 B1

REV	REVISION	DATE	ECN	NAME	CHKD
B-1	RELEASE TO PRODUCTION	11/07/11	22545	CHR	DMS
H-1	ADDED GROUND TERMINAL BLOCKS	04/23/25	PXEC0688	JRD	WMM
J-1	ADDED PLEX ISOLATION	07/02/25	PXEC0639	SEK	WMM

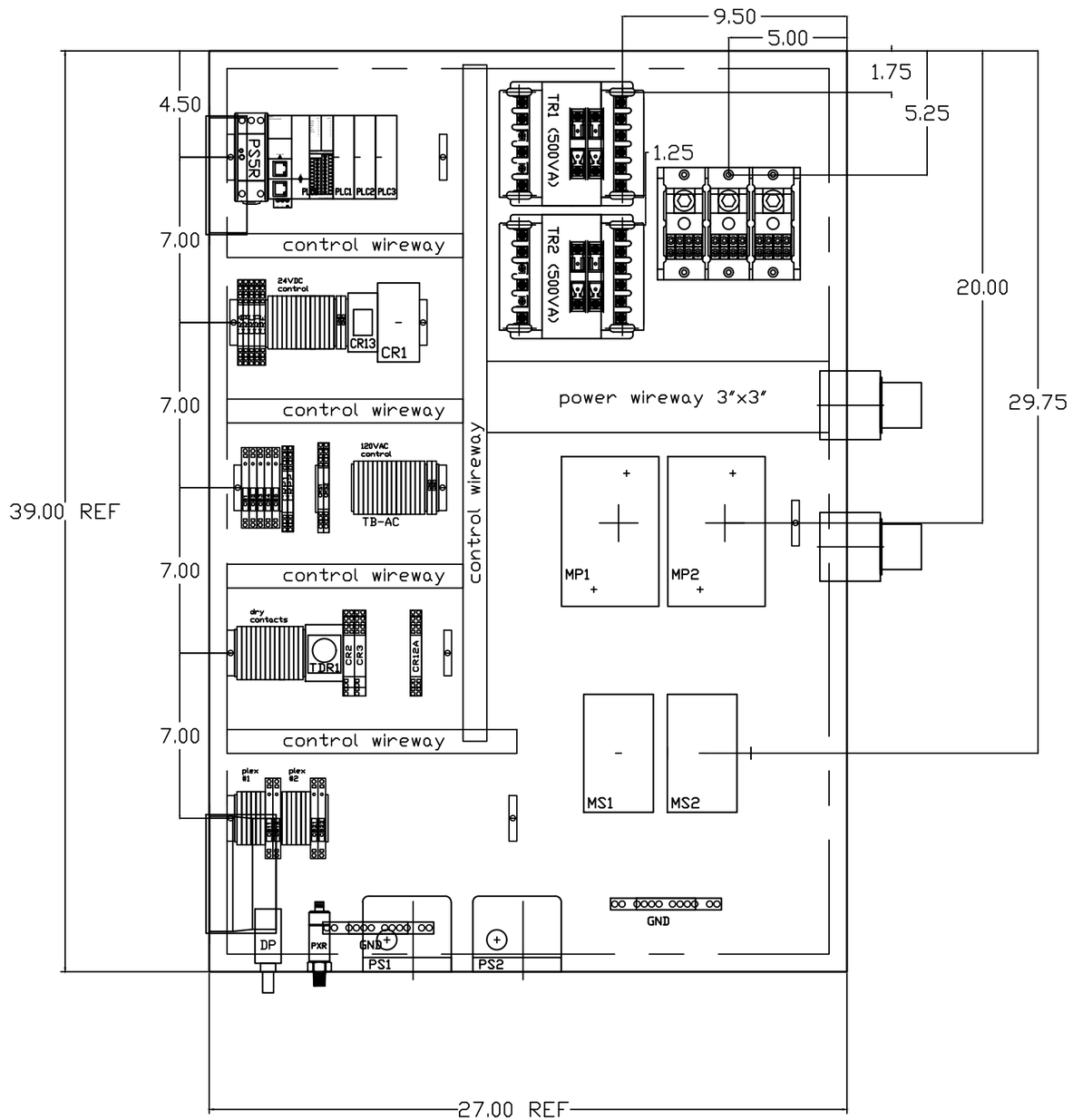

OPTIONAL:

POWEREX

CONFIDENTIAL DISCLOSURE:
This drawing is the property of POWEREX, INC. of the SCOTT FETZER COMPANY and subject to return on demand. Its contents are confidential and must not be copied or submitted to outside parties for use or examination.

DRAWN BY	CHECKED BY	ENGINEERING APPROVAL
CHR	DMS	DMS
07/20/11	11/07/11	11/07/11

PANEL TYPE

MED AIR DUPLEX
HMI, NFPA

DWG. TYPE LAYOUT B

DWG. NO.

PXMI-A216 W

SHEET

LB-2

SIZE

B

PXMI-A216 B1

TABLE 1	P/N	MOTOR FULL LOAD AMPS	TOTAL FULL LOAD AMPS	NON-TIME DELAY FUSE	TIME DELAY FUSE	INVERSE-TIME CIRCUIT BREAKER
208V (3Ø)	02AJ	4.1	10.2	20	15	20
	12AJ	4.5	11	20	15	20
	22AJ	5.6	13.2	25	20	25
	32AJ	8.8	19.6	40	30	35
	52AJ	14.6	31.2	70	45	60
	72AJ	20.5	43	90	60	80
	A2AJ *	27.4	56.8	125	80	100
	F2AJ *	41.1	84.2	175	125	150
230V (3Ø)	03AJ	3.6	9.2	20	15	20
	13AJ	4.4	10.8	20	15	20
	23AJ	5.8	13.6	30	20	25
	33AJ	7.7	17.4	35	25	30
	53AJ	12.7	27.4	60	40	50
	73AJ	18.5	39	80	60	70
	A3AJ	24.8	51.6	110	70	90
	F3AJ *	37.2	76.4	175	125	150
460V (3Ø)	04AJ	1.8	5.6	10	10	10
	14AJ	2.2	6.4	15	10	15
	24AJ	2.7	7.4	15	10	15
	34AJ	3.9	9.8	20	15	20
	54AJ	6.3	14.6	30	20	25
	74AJ	9.3	20.6	40	30	40
	A4AJ	12.4	26.8	60	40	50
	F4AJ	18.6	39.2	80	60	70
380V (3Ø) 50HZ	08AJ					
	18AJ					
	28AJ	3.4	8.8	20	15	15
	38AJ	4.6	11.2	25	15	20
	58AJ	7.7	17.4	35	25	30
	78AJ	11.1	24.2	50	35	45
	A8AJ	14.9	31.8	70	45	60
	F8AJ	22.1	46.2	100	70	80
575V (3Ø)	07AJ	1.1	4.2	10	10	10
	17AJ	1.76	5.5	10	10	10
	27AJ	2.3	6.6	15	10	15
	37AJ	3.1	8.2	15	15	15
	57AJ	5.1	12.2	25	20	25
	77AJ	6.9	15.8	30	25	30
	A7AJ	9.9	21.8	45	30	40
	F7AJ	14.9	31.8	70	45	60

* - USE LAYOUT B

REV	REVISION	DATE	ECN	NAME	CHKD
B-1	RELEASE TO PRODUCTION	03/12/12	22545	BFH	CHR
C-1	FORMAT UPDATE	03/04/13	PXEC0038	BFH	CHR

NOTES:

1. RECOMMENDED TIGHTENING TORQUES FOR WIRE TERMINALS:
   208-575 VOLT POWER 35 POUND INCHES
   120 VOLT POWER AND CONTROL VOLTAGE 15 POUND INCHES
2. PANEL GROUND MUST BE CONNECTED TO EARTH GROUND
3. INSTALLER TO PROVIDE MAIN DISCONNECTING DEVICE FOR THIS ELECTRICAL ASSEMBLY. SHORT CIRCUIT PROTECTION IS RECOMMENDED, SEE TABLE 1. IF PROVIDING PANEL SHORT CIRCUIT PROTECTION USING TIME DELAY FUSES, PANEL SCCR IS 65kA. OTHERWISE, PANEL SCCR IS 5kA.
4. ALL WIRES MUST BE LABELED ON BOTH ENDS
5. TRANSFORMER IS SIZED FOR LOADS SHOWN ON DRAWING ONLY. DO NOT CONNECT ANY OTHER DEVICES
6. △ -INDICATES A DRAWING WIRE CONNECTION TO ANOTHER PAGE.
7. SERVICE DISCONNECT USAGE - turn HOA switch to OFF position. Turn disconnect OF SAME UNIT to OFF position. Associated PLEX will be isolated for maintenance purposes. After completing maintenance, turn disconnect to ON position and return HOA switch to AUTO. This will return PLEX to normal operation.

WIRE TYPE TABLE

VOLTAGE	WIRE NUMBERS	GAUGE	COLOR
120VAC	001-599, 1100+	16-18AWG	RED/BLK
0VAC	W	16-18AWG	WHT/BLK
24VDC	600-1099	16-18AWG	PURPLE
0VDC	601	16-18AWG	PURPLE
GND	-	VARIES	GREEN
CUSTOMER SUPPLY	01-99	16-18AWG	YELLOW

CONTROL TRANSFORMERS - 500VA

REPLACEMENT FUSE TYPE		208 VOLT	230 VOLT	460 380 VOLT	575 VOLT
FU1,2A FU1,2B	FNQR	6A	5A	5A	4A
FU3A,B	FNM	7A	7A	7A	7A
SEE XFRMR FOR CONNECTIONS					

SEQUENCE OF OPERATIONS

During normal operation the PBMI controller will signal the Lead compressor to run when pressure drops below lead cut-in set-point and stop when the pressure reaches the lead cut-out set-point. Lead alternation to the next pump, will occur with each lead run signal or every 10-minutes (which ever happens first). If demand cannot be satisfied by the lead pump, the lag pump(s) will start and stop based upon the lag cut-in and cut-out set-points. When more than one pump is running, lead alternation will occur when the lowest cut-out set-point is satisfied, or after 10-minutes (which ever happens first). The HOA switch's place the pump in the following modes: Hand-turns pump on to run continuous. Off-disables pump from running. Auto-places pump in the "ready mode" and will start and stop based on sequence described above.

All plex configurations include a hardwired Back-up pressure switch circuit should a control failure occur. This circuit will call all pumps on and off based on the reserve pressure switch set-points.

Expandable systems include all control devices, operators, and programming for the maximum number of pumps (or plex) required. To expand the system: navigate to the "service screen" and enter the number of pumps.

Additional information and descriptions can be accessed through the HMI "service info" screen by pressing Sequence of Operations button.

OPTIONAL:

208V/230V/460V/380V/575V

POWEREX™

CONFIDENTIAL DISCLOSURE:
This drawing is the property of the CAMPBELL GROUP of the SCOTT FETZER COMPANY and subject to return on demand. Its contents are confidential and must not be copied or submitted to outside parties for use or examination.

DRAWN BY	CHECKED BY	ENGINEERING APPROVAL
BFH	CHR	CHR
03/12/12	09/20/11	09/20/11

PANEL TYPE

COMPRESSOR DATA TABLE
3PH DUPLEX PANEL DATA

DWG. TYPE MISC

DWG. NO.

DATA TABLE

SHEET D-1 DUPLEX PANEL DATA

SIZE B