STD0303x2

3HP/3P SCROLL TANKMOUNT DUPLEX 80GH ED

REVISION NOTES		
DESCRIPTION	ECN	PR/NOR
CREATED IN 3D, DAVINCI_2 PHASE 15	PXEC0583	N/A

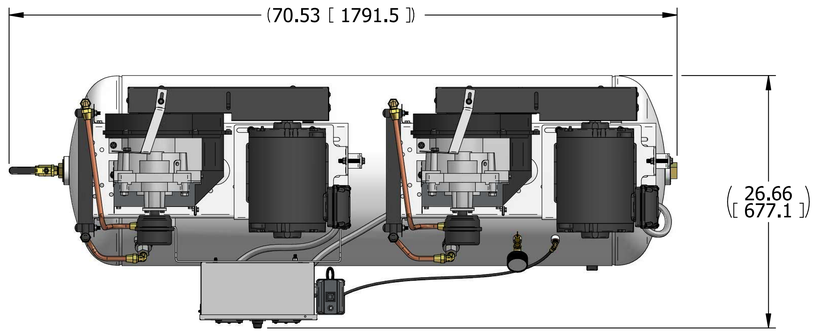

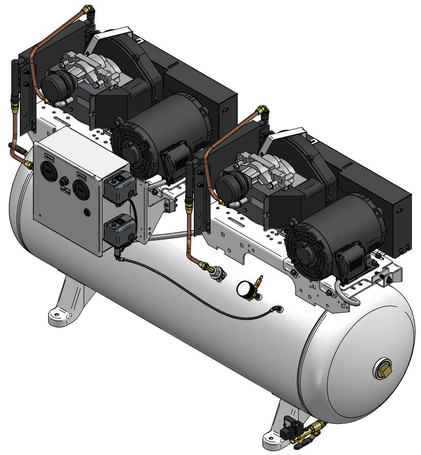

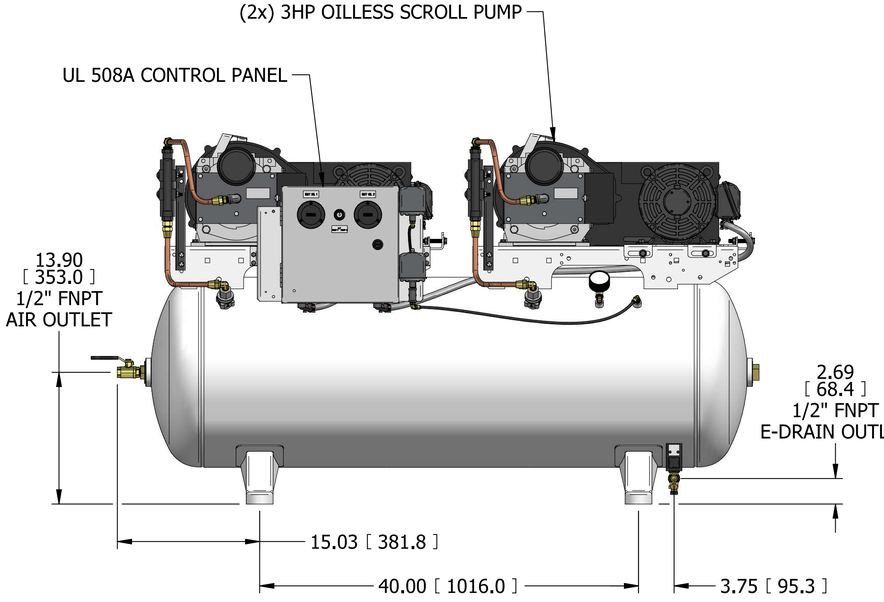

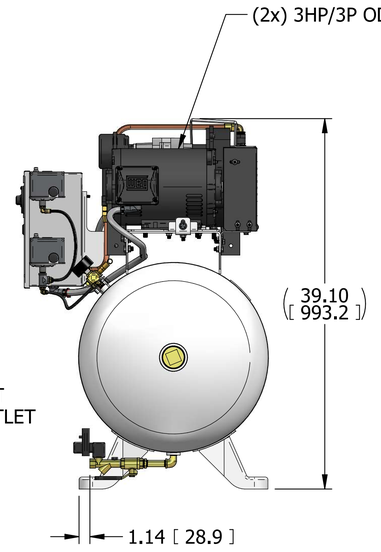

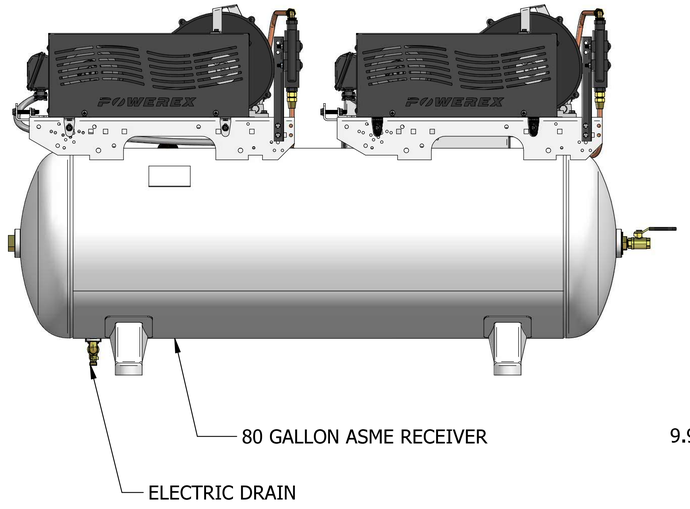

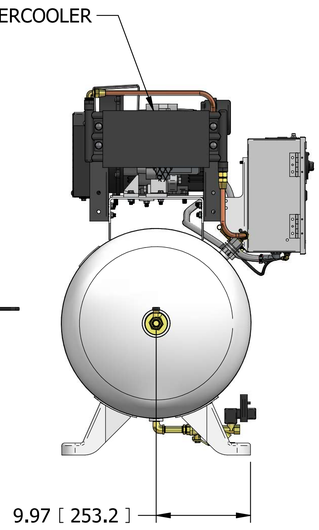

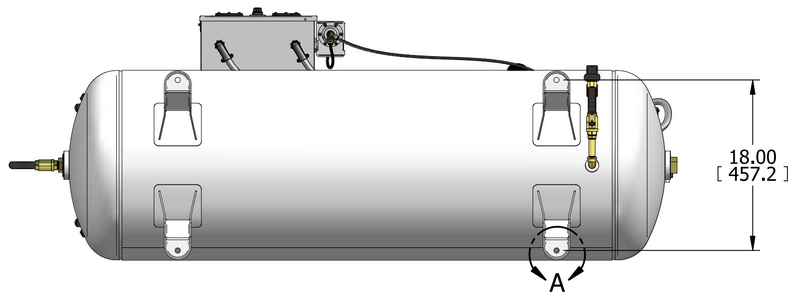

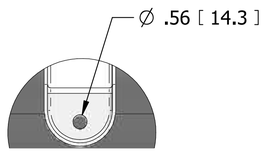

(4X) DETAIL A

NOTES:
1. APPROXIMATE WEIGHT: 544 lb (247 kg)
2. A MINIMUM OF 24" CLEARANCE IS RECOMMENDED AROUND THE ENTIRE UNIT. CLEARANCE FOR CONTROL PANEL SHALL BE IN ACCORDANCE WITH OSHA/NEC REQUIREMENTS

SYMBOL LEGEND		DRAWINGS TO CONFORM TO CURRENT REVISION OF THE FOLLOWING ANSI STANDARDS: Y14.3 MULTI AND SECTIONAL VIEW DWGS Y14.5 DIMENSIONING AND TOLERANCING
TOLERANCES, UNLESS OTHERWISE SPECIFIED: 0.XX ± .05; 0.XXX ± .005; ∠ ± 1	SOLID EDGE DRAWING; INCH [mm]	DO NOT SCALE DRAWING FOR DIMENSIONS; SHEET 1 OF 2; SCALE 1:8
CONFIDENTIAL DISCLOSURE: This drawing is the property of POWEREX of the SCOTT FETZER COMPANY and is subject to return on demand. Its contents are confidential and must not be copied or submitted to outside parties for use or examination.	AUTHOR: RGHOLAP; REVISION DATE: 10/9/2023; APPROVALS ON FILE IN PLM	
ITEM ID: 749127; MATERIAL: N/A	POWEREX 150 PRODUCTION DRIVE, HARRISON OH 45030 (888) 769-7979	
DESCRIPTION: 3HP/3P SCROLL TANKMOUNT DUPLEX 80GH ED	DRAWING NUMBER: STD0303x2; REVISION: A; SIZE: D	

STD0303x2

3HP/3P SCROLL TANKMOUNT DUPLEX 80GH ED

REVISION NOTES		
DESCRIPTION	ECN	PR/NOR
CREATED IN 3D, DAVINCI_2 PHASE 15	PXEC0583	N/A

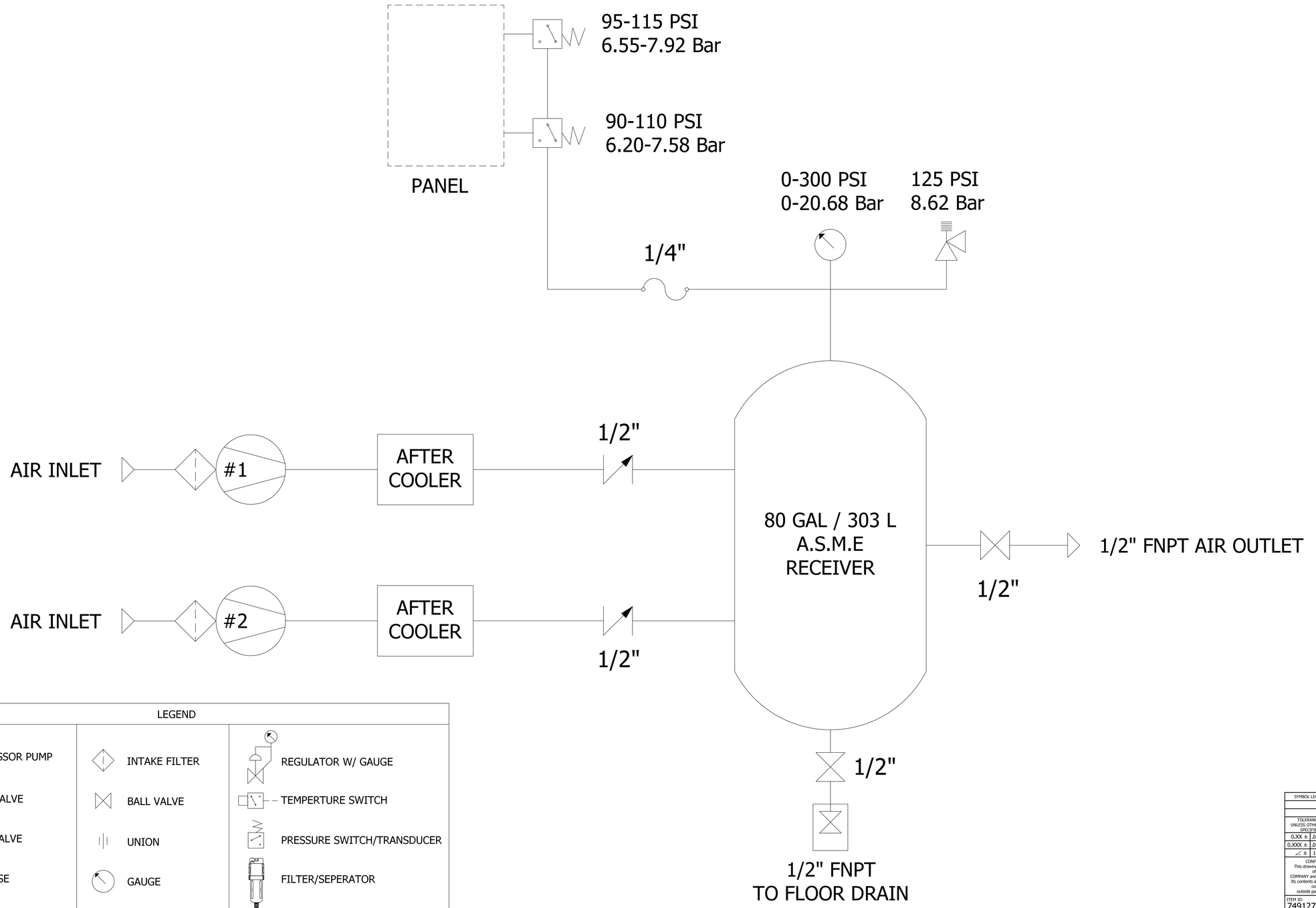

LEGEND

COMPRESSOR PUMP	INTAKE FILTER	REGULATOR W/ GAUGE
RELIEF VALVE	BALL VALVE	TEMPERTURE SWITCH
CHECK VALVE	UNION	PRESSURE SWITCH/TRANSDUCER
FLEX HOSE	GAUGE	FILTER/SEPERATOR
AIR LINE	SHUTTLE VALVE	ELECTRIC AUTO DRAIN
CONDENSATE LINE		

SYMBOL LEGEND

DRAWINGS TO CONFORM TO CURRENT REVISION OF THE FOLLOWING ANSI STANDARDS:
Y14.3 MULTI AND SECTIONAL VIEW DWGS
Y14.5 DIMENSIONING AND TOLERANCING

TOLERANCES, UNLESS OTHERWISE SPECIFIED
0.XX ± .05
0.XXX ± .005
∠ ± 1

SOLID EDGE DRAWING

DO NOT SCALE DRAWING FOR DIMENSIONS

INCH [mm]

SHEET 2 OF 2

SCALE 1:1

CONFIDENTIAL DISCLOSURE
This drawing is the property of POWEREX of the SCOTT FETZER COMPANY and is subject to return on demand. Its contents are confidential and must not be copied or submitted to outside parties for use or examination.

AUTHOR	REVISION DATE	APPROVALS ON FILE IN PLM
RGHOLAP	10/9/2023	

ITEM ID:
749127

MATERIAL:
N/A

DESCRIPTION:
3HP/3P SCROLL TANKMOUNT DUPLEX 80GH ED

POWEREX™
150 PRODUCTION DRIVE, HARRISON OH 45030
(888) 769-7979

DRAWING NUMBER	REVISION	SIZE
STD0303x2	A	D