# STD10B4x2

## 10HP SCROLL TANKMOUNT DUPLEX 120GH

| REVISION NOTES | |
|---|---|
| DESCRIPTION | ECN |
| REVISED OUTLET PLUMBING AND PANEL SIZE | PXEC0318 |

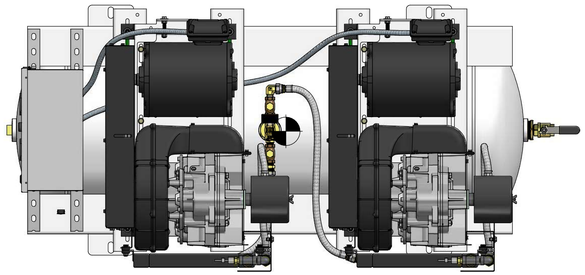

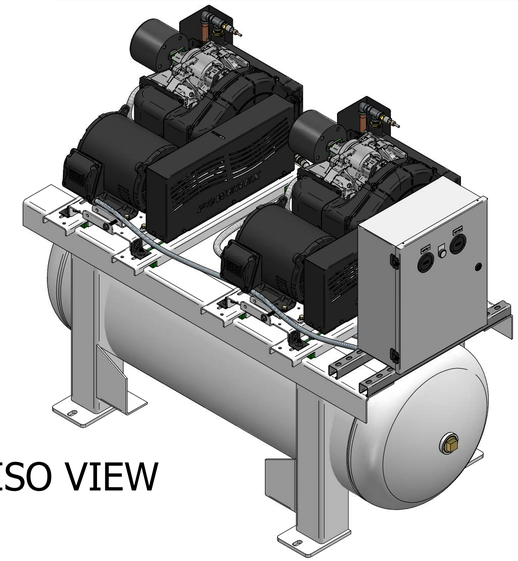

ISO VIEW

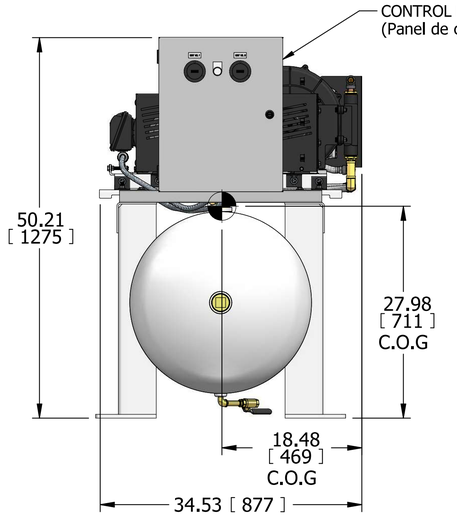


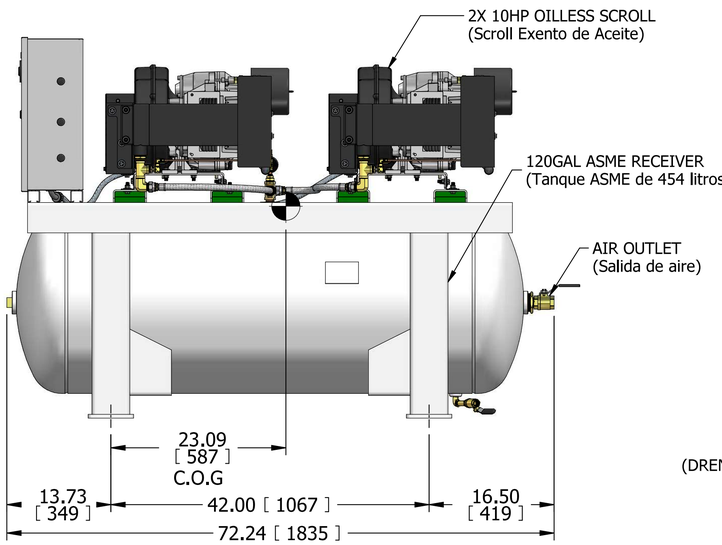


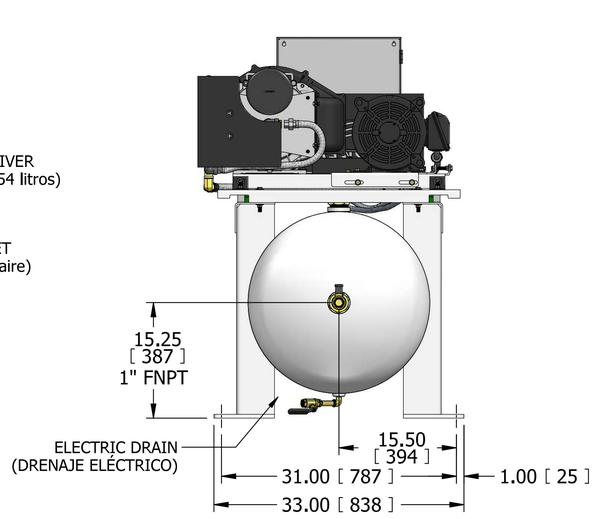


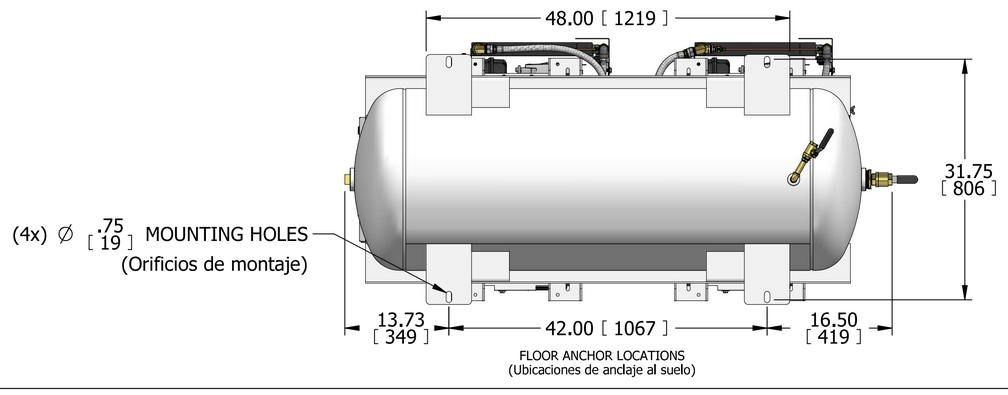


FLOOR ANCHOR LOCATIONS
(Ubicaciones de anclaje al suelo)

NOTE:
1. APPROXIMATE WEIGHT: 1147 lb (519 kg)
2. A MINIMUM OF 24" CLEARANCE IS RECOMMENDED AROUND THE ENTIRE UNIT. CLEARANCE FOR CONTROL PANEL SHALL BE IN ACCORDANCE WITH OSHA/NEC REQUIREMENTS

| | | |
|---|---|---|
| SYMBOL LEGEND | | DRAWINGS TO CONFORM TO CURRENT REVISION OF THE FOLLOWING ANSI STANDARDS: Y14.3 MULTI AND SECTIONAL VIEW DWGS Y14.5 DIMENSIONING AND TOLERANCING |
| TOLERANCES, UNLESS OTHERWISE SPECIFIED: 0.XX ± .05; 0.XXX ± .005; ∠ ± 1 | SOLID EDGE DRAWING | DO NOT SCALE DRAWING FOR DIMENSIONS |
| | INCH [mm] | SHEET 1 OF 2 / SCALE 1:8 |
| CONFIDENTIAL DISCLOSURE This drawing is the property of POWEREX INC. of MARMON HOLDINGS, INC., and is subject to return on demand. Its contents are confidential and must not be copied or submitted to outside parties for use or examination. | AUTHOR: Kumar,Sreehari | REVISION DATE: 07/27/26 |
| ITEM ID: 761917 | POWEREX 150 PRODUCTION DRIVE, HARRISON OH 45030 (888) 769-7979 | |
| MATERIAL: N/A | | |
| DESCRIPTION: 10HP SCROLL TANKMOUNT DUPLEX 120GH | DRAWING NUMBER: STD10B4x2 | REVISION: A / SIZE: D |

# STD10B4x2

## 10HP SCROLL TANKMOUNT DUPLEX 120GH

| REVISION NOTES | |
|---|---|
| DESCRIPTION | ECN |
| REVISED OUTLET PLUMBING AND PANEL SIZE | PXEC0318 |

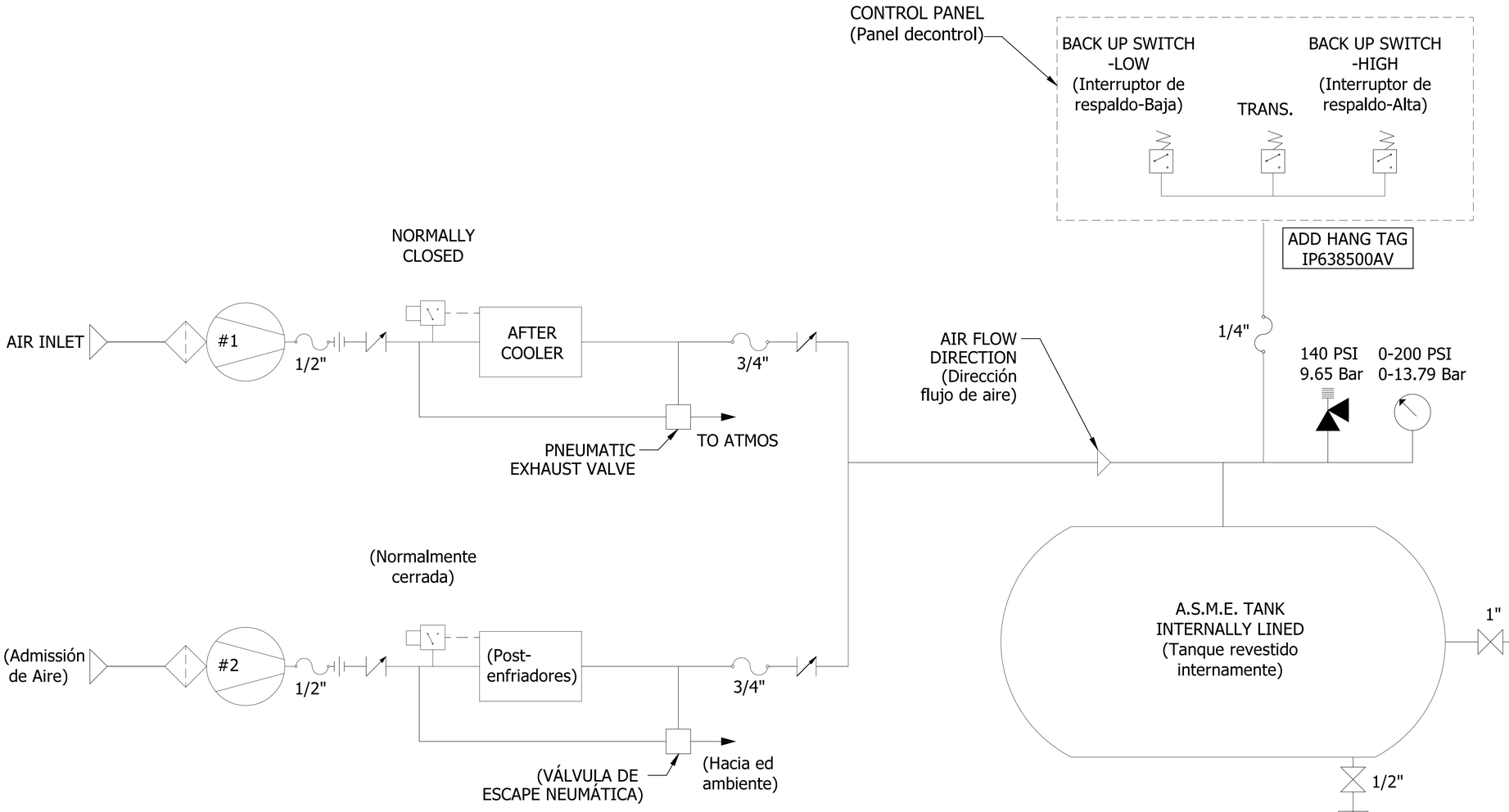


LEGEND (Leyenda)

| | | | |
|---|---|---|---|
| COMPRESSOR PUMP (Compresor de Aire) | AIR LINE (Tubería de Aire) | BALL VALVE (Válvula bola) | REGULATOR W/ GAUGE (Regulador con Manómetro) |
| INTAKE FILTER (Filtro admisión) | CONDENSATE LINE (Línea de condensado) | RELIEF VALVE (Válvula de seguridad) | TEMPERTURE SWITCH (Interruptor temperatura) |
| FILTER/SEPERATOR (Filtro/Separador) | FLEX HOSE (Manguera flexible) | CHECK VALVE (Válvula Cheque) | PRESSURE SWITCH/TRANSDUCER (Interruptor/Transductor presión) |
| GAUGE (Manómetro) | UNION (Unión) | DEMAND VALVE (Válvula de demanda) | ELECTRIC AUTO DRAIN (Electroválvula de Drenaje) |

NOTES:
1. IF LAST COMPRESSOR PLEX IS ENERGIZED ALARM WILL OCCUR.
2. PIPING TO THE INLET BY OTHERS AND TO BE PER NFPA99 4-3.1.19(b)
3. INSTRUMENTS DOWN STREAM OF SOURCE VALVE TO BE SUPPLIED BY OTHERS.

1. SI EL ÚLTIMO COMPRESOR SE ACTIVA, SE PRODUCIRÁ UNA ALARMA.
2. TUBERÍA DE ADMISION POR OTROS Y CUMPLIR CON LA NFPA 99 4-3.1.19 (b).
3. ACCESORIOS AGUAS-ABAJO DE LA VALVULA DE CORTE DE SUMINISTRO SERAN INSTALADOS POR OTROS.

| | | | |
|---|---|---|---|
| SYMBOL LEGEND | | DRAWINGS TO CONFORM TO CURRENT REVISION OF THE FOLLOWING ANSI STANDARDS: Y14.3 MULTI AND SECTIONAL VIEW DWGS Y14.5 DIMENSIONING AND TOLERANCING | |
| TOLERANCES, UNLESS OTHERWISE SPECIFIED: 0.XX ± .05; 0.XXX ± .005; ∠ ± 1 | SOLID EDGE DRAWING | DO NOT SCALE DRAWING FOR DIMENSIONS | |
| | INCH [mm] | SHEET 2 OF 2 | SCALE 1:1 |
| CONFIDENTIAL DISCLOSURE: This drawing is the property of POWEREX INC. of MARMON HOLDINGS, INC., and is subject to return on demand. Its contents are confidential and must not be copied or submitted to outside parties for use or examination. | AUTHOR | REVISION DATE | APPROVALS ON FILE IN PLM |
| | Kumar,Sreehari | 07/27/26 | |
| ITEM ID: 761917 | POWEREX 150 PRODUCTION DRIVE, HARRISON OH 45030 (888) 769-7979 | | |
| MATERIAL: N/A | | | |
| DESCRIPTION: 10HP SCROLL TANKMOUNT DUPLEX 120GH | DRAWING NUMBER: STD10B4x2 | REVISION: A | SIZE: D |