REV	REVISION	DATE	ECN	NAME	CHKD
B-1	RELEASE TO PRODUCTION	06/16/25	PXEC0667	SEK	WMM

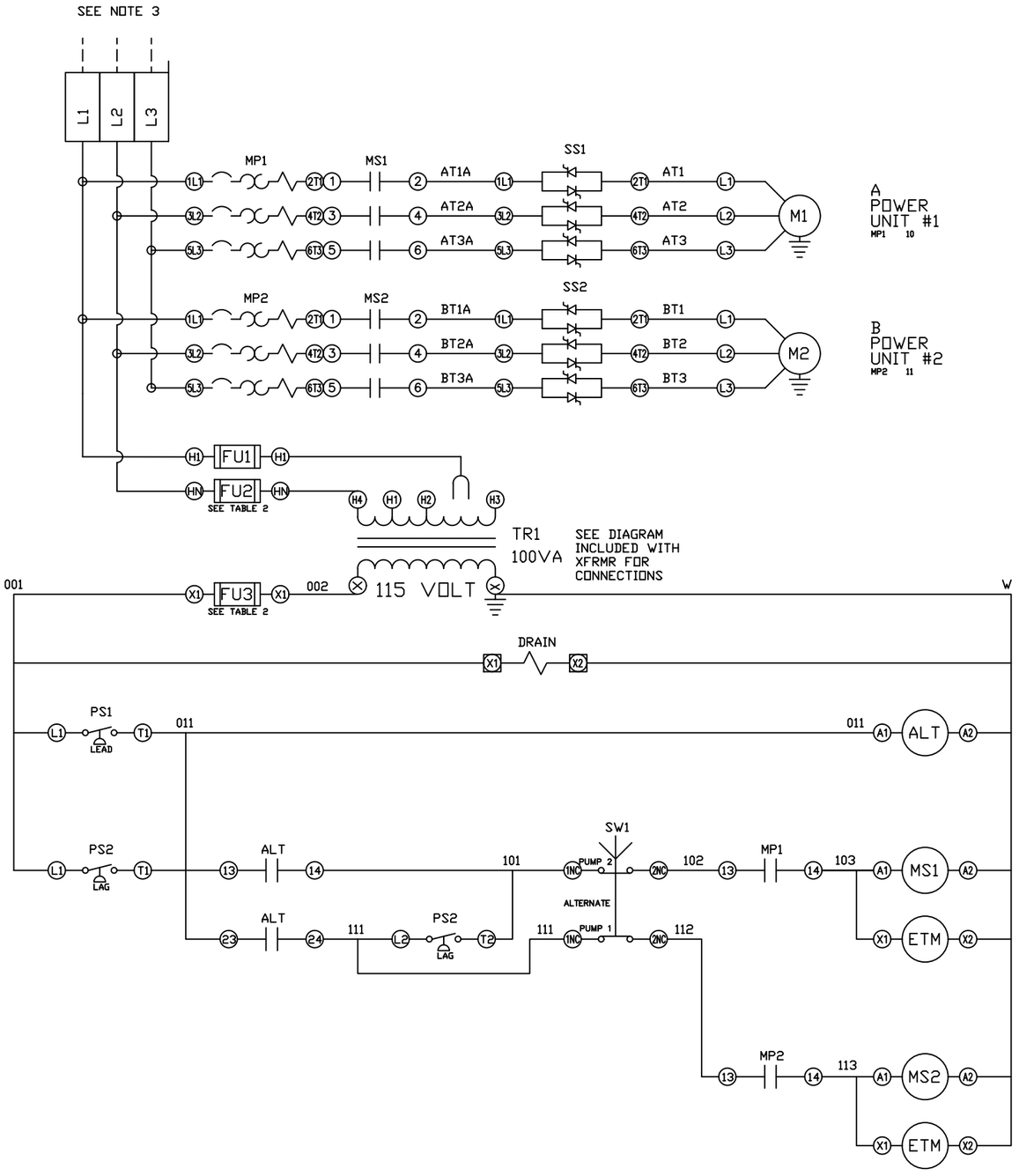

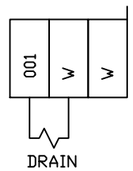

NOTES:

1. RECOMMENDED TIGHTENING TORQUES FOR WIRE TERMINALS:
   208-460 VOLT POWER 35 POUND INCHES
   115 VOLT POWER, CONTROL
   AND LOW VOLTAGE 20 POUND INCHES
2. PANEL GROUND MUST BE CONNECTED TO EARTH GROUND
3. INSTALLER TO PROVIDE MAIN DISCONNECTING DEVICE WITH SHORT CIRCUIT PROTECTION FOR THIS ELECTRICAL ASSEMBLY. SEE TABLE 1 FOR SIZING INFORMATION.
4. ALL WIRES MUST BE LABELED ON BOTH ENDS
5. TRANSFORMER IS SIZED FOR LOADS SHOWN ON DRAWING ONLY. DO NOT CONNECT ANY OTHER DEVICES

WIRE TYPE TABLE

VOLTAGE	WIRE NUMBERS	GAUGE	COLOR
120VAC	001-699	16-18AWG	RED/BLK
0VAC	W	16-18AWG	WHT/BLK
24VDC	700-999	16-18AWG	PURPLE
0VDC	701	16-18AWG	PURPLE
GND	-	14 AWG	GREEN
CUSTOMER SUPPLY	01-99	16AWG	YELLOW

OPTIONAL:

TABLE 2

CONTROL TRANSFORMERS - 100VA

	FUSE TYPE	208 VOLT	230 VOLT	380 VOLT	460 VOLT	575 VOLT
FU1,2	FNQR	2A	2A	1A	1A	0.5A
FU3	FNM	1.25A	1.25A	1.25A	1.25A	1.25A

POWEREX™

CONFIDENTIAL DISCLOSURE:
This drawing is the property of POWEREX, INC. of Marmon Specialty Products and is subject to return on demand. Its contents are confidential and must not be copied or submitted to outside parties for use or examination.

DRAWN BY	CHECKED BY	ENGINEERING APPROVAL
SEK	WMM	WMM
06/16/25	06/16/25	06/16/25

PANEL TYPE

SCROLL DUPLEX INDUSTRIAL

DWG. TYPE WIRING

DWG. NO.

PSIS-200

SHEET W-1

SIZE B

PSIS-200

REV	REVISION	DATE	ECN	NAME	CHKD
B-1	RELEASE TO PRODUCTION	06/16/25	PXEC0667	SEK	WMM

SET START TIME TO 3-SEC (B)

SET INITIAL VOLT SETTING TO 67% (D)

SET STOP TIME TO 5 SEC (C)

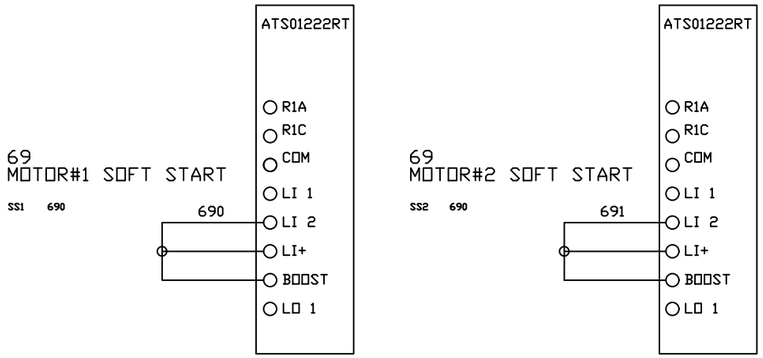

OPTIONAL:

POWEREX

CONFIDENTIAL DISCLOSURE:
This drawing is the property of POWEREX, INC. of Marmon Specialty Products and is subject to return on demand. Its contents are confidential and must not be copied or submitted to outside parties for use or examination.

DRAWN BY	CHECKED BY	ENGINEERING APPROVAL
SEK	WMM	WMM
06/16/25	06/16/25	06/16/25

PANEL TYPE

SCROLL DUPLEX INDUSTRIAL

DWG. TYPE WIRING

DWG. NO.

PSIS-200

SHEET W-2

SIZE B

REV	REVISION	DATE	ECN	NAME	CHKD
B-1	RELEASE TO PRODUCTION	06/16/25	PXEC0667	SEK	WMM

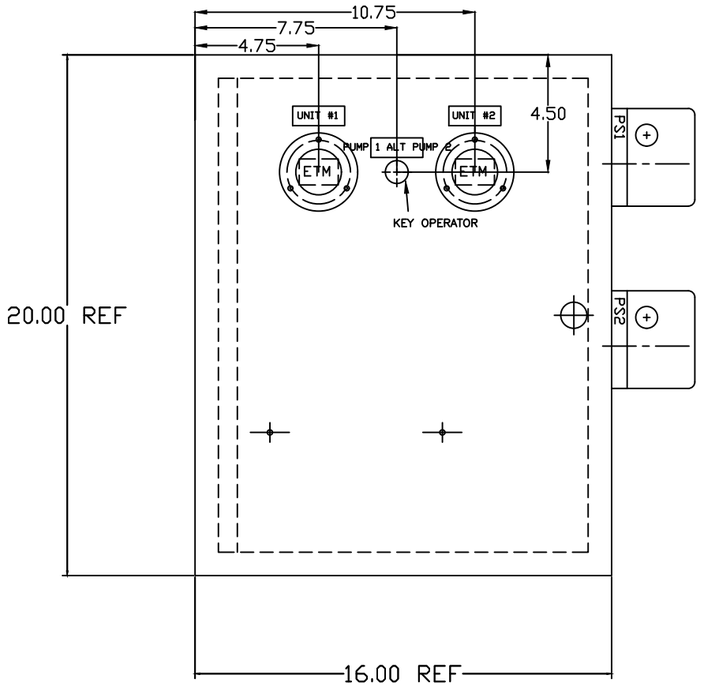

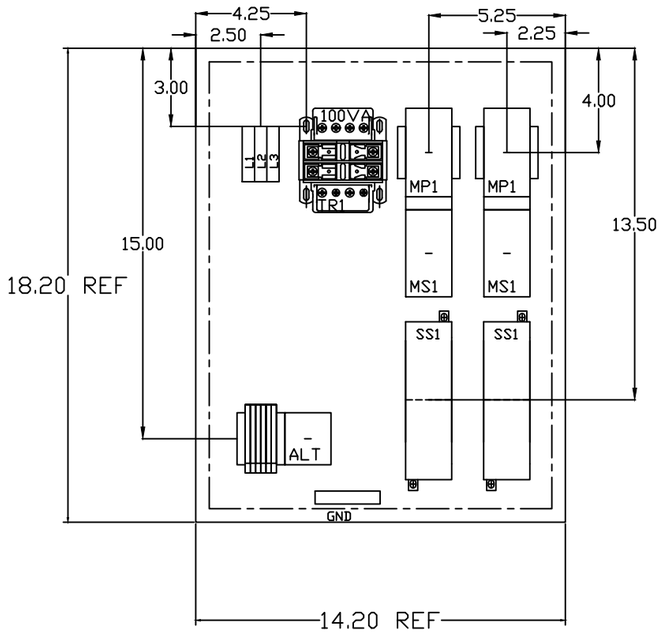

OPTIONAL:

POWEREX

CONFIDENTIAL DISCLOSURE:
This drawing is the property of POWEREX, INC. of Marmon Specialty Products and is subject to return on demand. Its contents are confidential and must not be copied or submitted to outside parties for use or examination.

DRAWN BY	CHECKED BY	ENGINEERING APPROVAL
SEK	WMM	WMM
06/16/25	06/16/25	06/16/25

PANEL TYPE

SCROLL DUPLEX INDUSTRIAL

DWG. TYPE LAYOUT

DWG. NO.

PSIS-200

SHEET	SIZE
LA-1	B

PSIS-200

TABLE 1	P/N	MOTOR FULL LOAD AMPS	TOTAL FULL LOAD AMPS	NON-TIME DELAY FUSE	TIME DELAY FUSE	INVERSE-TIME CIRCUIT BREAKER
208V (3Ø)	72AJ	21.1	44.2	90	70	80
	A2AJ	26.5	55	110	80	100
230V (3Ø)	73AJ	17.9	37.8	80	60	70
	A3AJ	24	50	100	70	90
460V (3Ø)	74AJ	8.97	19.94	40	30	35
	A4AJ	12	26	50	35	45
380V (3Ø) 50HZ	78AJ	10.7	23.4	45	35	40
	A8AJ	14.5	31	60	45	60

NOTE– FOR STANDARD PRESSURE SYSTEMS, USE PSI200XXAJ PART#,
FOR HIGH PRESSURE SYSTEMS, USE PSI200XXHP PART#

REV	REVISION	DATE	ECN	NAME	CHKD
B-1	RELEASE TO PRODUCTION	07/24/14	PXEC0057	KMD	DMS

WIRE TYPE TABLE

VOLTAGE	WIRE NUMBERS	GAUGE	COLOR
120VAC	001-699	16-18AWG	RED/BLK
0VAC	W	16-18AWG	WHT/BLK
24VDC	700-999	16-18AWG	PURPLE
0VDC	701	16-18AWG	PURPLE
GND	-	14 AWG	GREEN
CUSTOMER SUPPLY	01-99	16AWG	YELLOW

OPTIONAL:

208V/230V/460V/380V/575V

POWEREX

CONFIDENTIAL DISCLOSURE:
This drawing is the property of POWEREX INC of the SCOTT FETZER COMPANY and subject to return on demand. Its contents are confidential and must not be copied or submitted to outside parties for use or examination.

DRAWN BY	CHECKED BY	ENGINEERING APPROVAL
KMD	DMS	DMS
07/24/14	07/24/14	07/24/14

PANEL TYPE

7.5/10 SCROLL DATA
DUPLEX PANEL DATA

DWG. TYPE MISC

DWG. NO.

DATA TABLE

SHEET D-1

SIZE B

SCROLL 7-10 DUPLEX

TABLE 2

CONTROL TRANSFORMERS - 100VA

	FUSE TYPE	208 VOLT	230 VOLT	380 VOLT	460 VOLT	575 VOLT
FU1,2	FNQR	2A	2A	1A	1A	0.5A
FU3	FNM	1.25A	1.25A	1.25A	1.25A	1.25A