STD10B5x2

10HP SCROLL TANKMOUNT DUPLEX 200GH

REVISION NOTES	
DESCRIPTION	ECN
REMOVED TEMP SWITCHES IN MODEL AND ON FLOW (IS AN OPTION)	PXEC0318

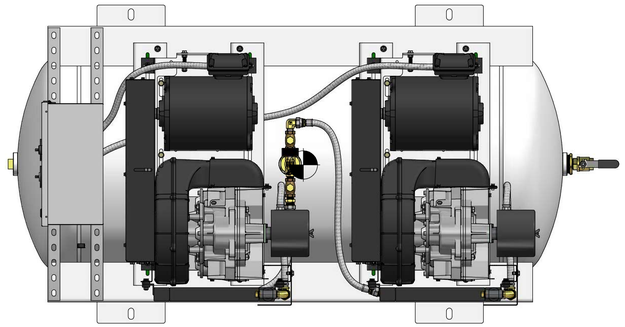

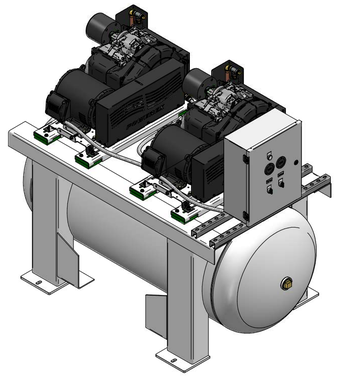

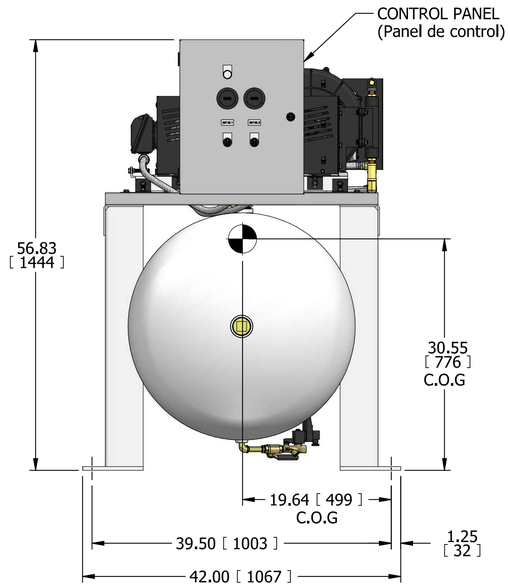

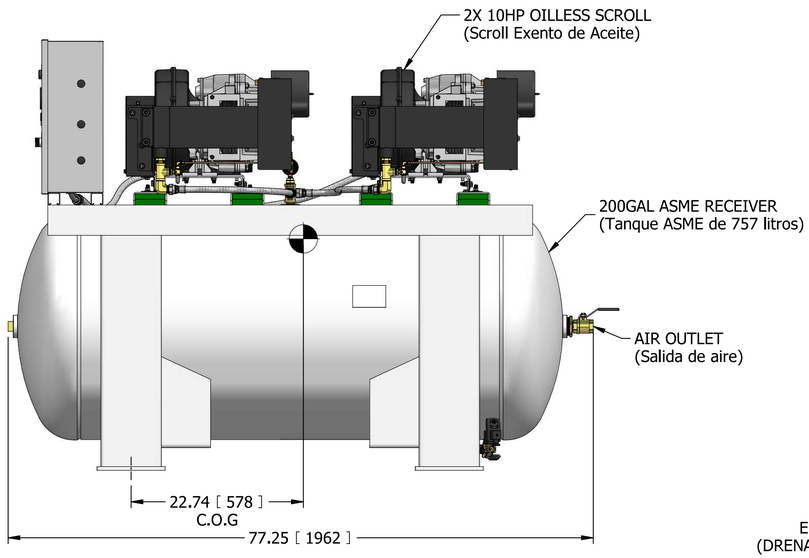

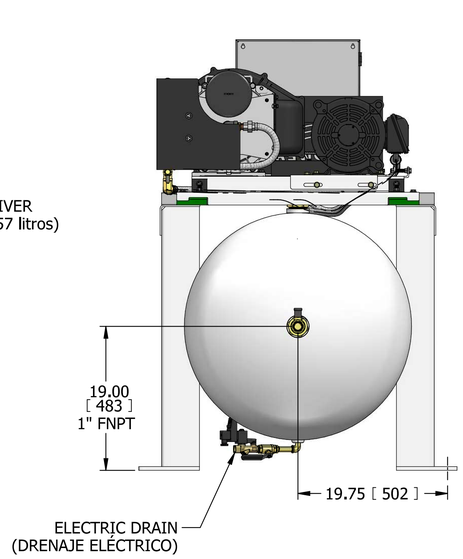

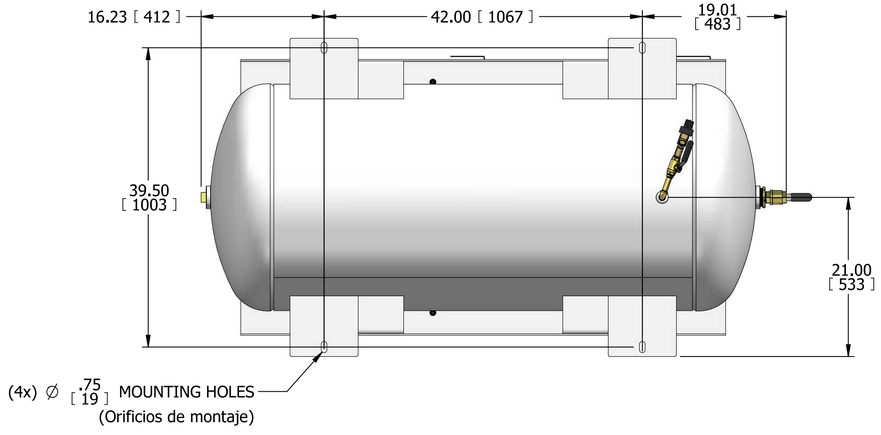

NOTES:
1. APPROXIMATE WEIGHT: 1388 lb (630 Kg)
2. A MINIMUM OF 24" CLEARANCE IS RECOMMENDED AROUND THE ENTIRE UNIT.
3. CLEARANCE FOR CONTROL PANEL SHALL BE IN ACCORDANCE WITH OSHA/NEC REQUIREMENTS.

SYMBOL LEGEND		DRAWINGS TO CONFORM TO CURRENT REVISION OF THE FOLLOWING ANSI STANDARDS: Y14.3 MULTI AND SECTIONAL VIEW DWGS Y14.5 DIMENSIONING AND TOLERANCING
TOLERANCES, UNLESS OTHERWISE SPECIFIED: 0.XX ± .05; 0.XXX ± .005; ∠ ± 1	SOLID EDGE DRAWING; INCH [mm]	DO NOT SCALE DRAWING FOR DIMENSIONS; SHEET 1 OF 2; SCALE 1:8
CONFIDENTIAL DISCLOSURE: This drawing is the property of POWEREX INC. of MARMON HOLDINGS, INC., and is subject to return on demand. Its contents are confidential and must not be copied or submitted to outside parties for use or examination.	AUTHOR: Seaver,Greg	REVISION DATE: 08/28/25; APPROVALS ON FILE IN PLM
ITEM ID: 762639; MATERIAL: N/A	POWEREX® 150 PRODUCTION DRIVE, HARRISON OH 45030 (888) 769-7979	
DESCRIPTION: 10HP SCROLL TANKMOUNT DUPLEX 200GH	DRAWING NUMBER: STD10B5x2	REVISION: C; SIZE: D

STD10B5x2

10HP SCROLL TANKMOUNT DUPLEX 200GH

REVISION NOTES	
DESCRIPTION	ECN
REMOVED TEMP SWITCHES IN MODEL AND ON FLOW (IS AN OPTION)	PXEC0318

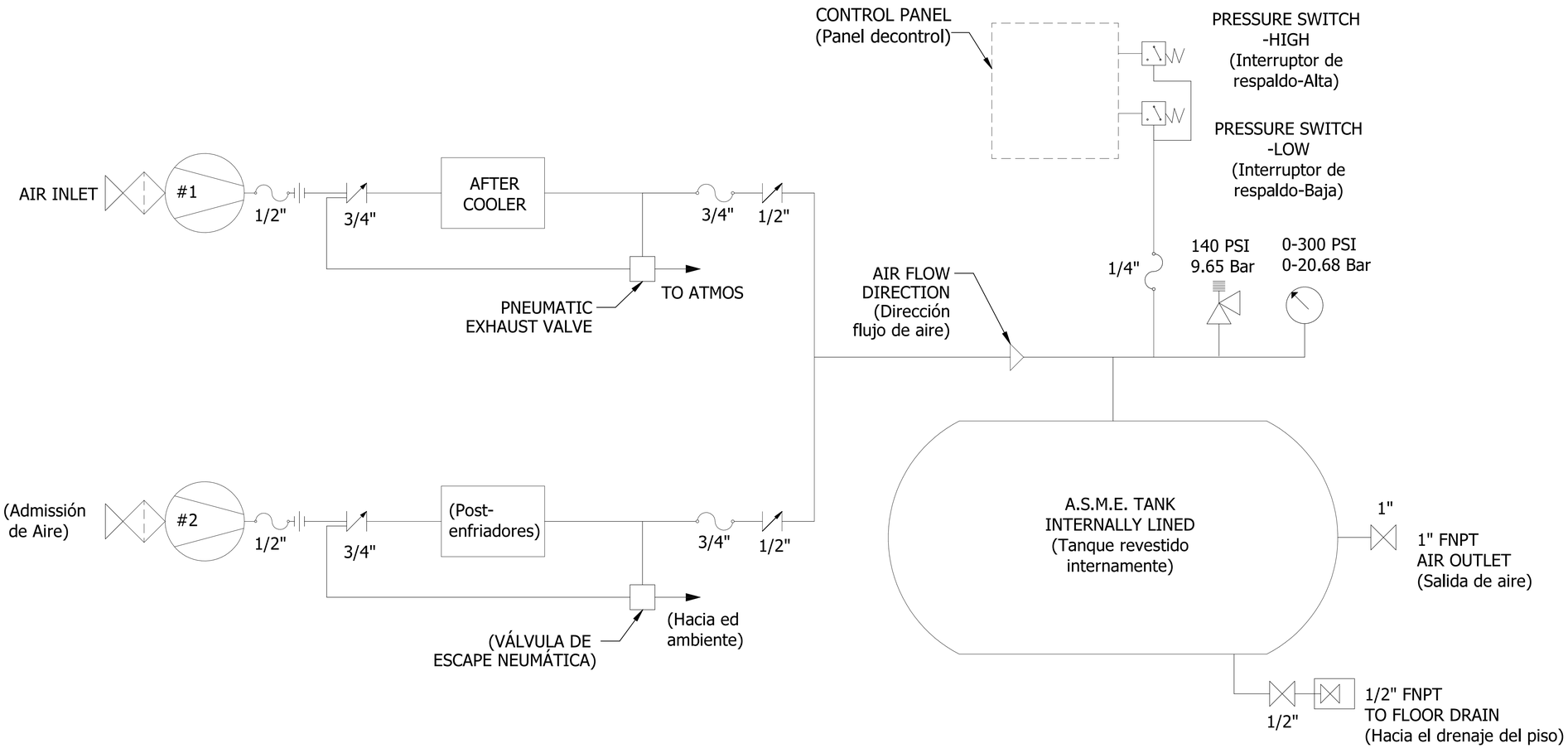

LEGEND (Leyenda)

COMPRESSOR PUMP (Compresor de Aire)	AIR LINE (Tubería de Aire)	BALL VALVE (Válvula bola)	REGULATOR W/ GAUGE (Regulador con Manómetro)
INTAKE FILTER (Filtro admisión)	CONDENSATE LINE (Línea de condensado)	RELIEF VALVE (Válvula de seguridad)	TEMPERTURE SWITCH (Interruptor temperatura)
FILTER/SEPERATOR (Filtro/Separador)	FLEX HOSE (Manguera flexible)	CHECK VALVE (Válvula Cheque)	PRESSURE SWITCH/TRANSDUCER (Interruptor/Transductor presión)
GAUGE (Manómetro)	UNION (Unión)	DEMAND VALVE (Válvula de demanda)	ELECTRIC AUTO DRAIN (Electroválvula de Drenaje)

SYMBOL LEGEND

DRAWINGS TO CONFORM TO CURRENT REVISION OF THE FOLLOWING ANSI STANDARDS:
Y14.5 MULTI AND SECTIONAL VIEW DWGS
Y14.5 DIMENSIONING AND TOLERANCING

TOLERANCES, UNLESS OTHERWISE SPECIFIED
0.XX ± .05
0.XXX ± .005
∠ ± 1

SOLID EDGE DRAWING

DO NOT SCALE DRAWING FOR DIMENSIONS

INCH [mm]

SHEET 2 OF 2 | SCALE 1:1

CONFIDENTIAL DISCLOSURE
This drawing is the property of POWEREX INC. of MARMON HOLDINGS, INC., and is subject to return on demand. Its contents are confidential and must not be copied or submitted to outside parties for use or examination.

AUTHOR	REVISION DATE	APPROVALS ON FILE IN PLM
Seaver,Greg	08/28/25	

ITEM ID: 762639
MATERIAL: N/A
DESCRIPTION: 10HP SCROLL TANKMOUNT DUPLEX 200GH

POWEREX®
150 PRODUCTION DRIVE, HARRISON OH 45030
(888) 769-7979

DRAWING NUMBER	REVISION	SIZE
STD10B5x2	C	D