REV	REVISION	DATE	ECN	NAME	CHKD
B-1	RELEASE TO PRODUCTION	01/03/12	22722	BFH	CHR
I-1	CHANGED GND TO BE 14 AWG	4/16/25	PXEC0668	MJV	JRD
J-1	UPDATING TERMINAL BLOCKS	9/24/25	PXEC0718	MJV	JA
K-1	ADDING PSI20037XX SPEC	10/1/25	PXEC0668	MJV	JA

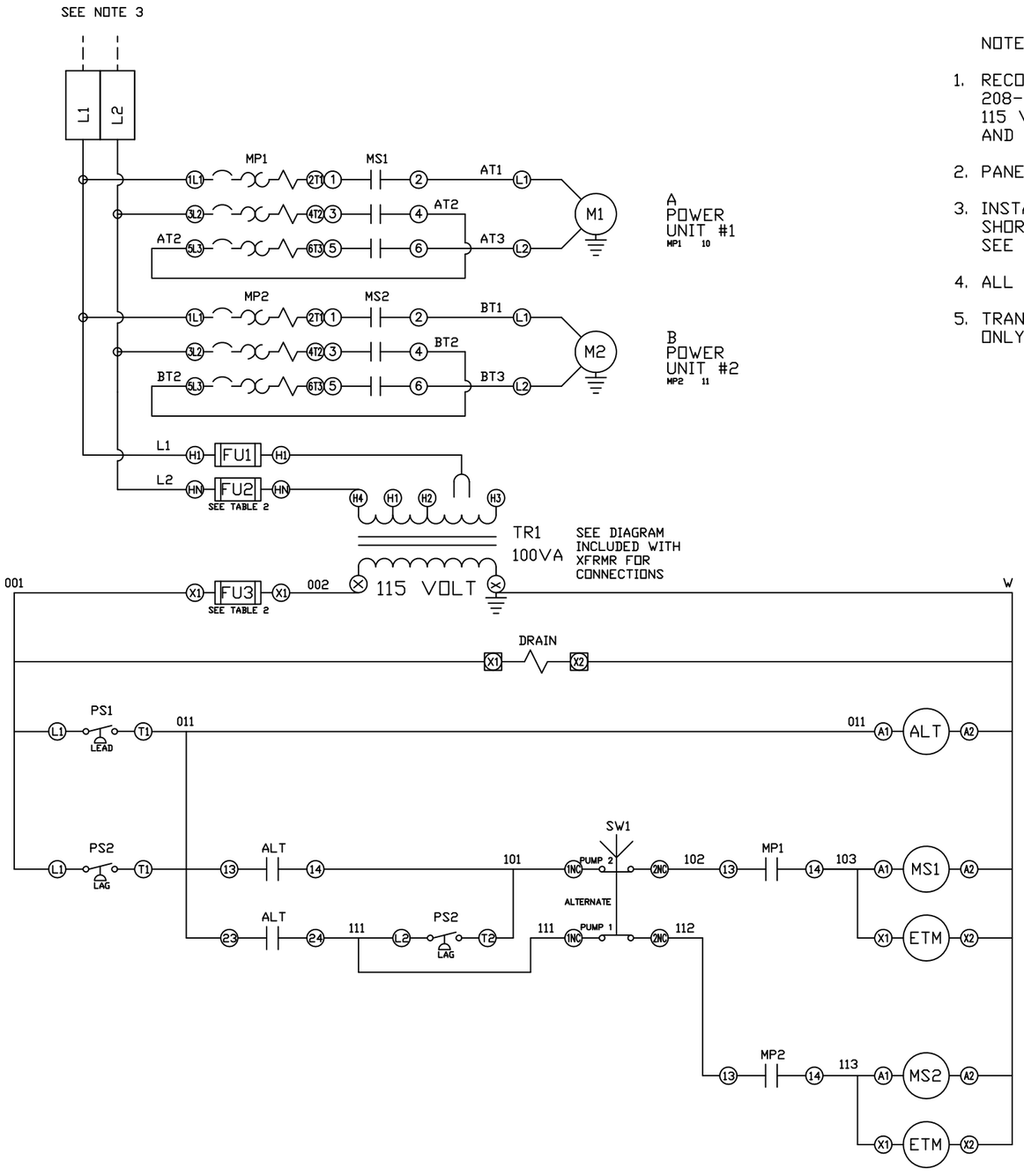

NOTES:

1. RECOMMENDED TIGHTENING TORQUES FOR WIRE TERMINALS:
   208-460 VOLT POWER 35 POUND INCHES
   115 VOLT POWER, CONTROL
   AND LOW VOLTAGE 20 POUND INCHES
2. PANEL GROUND MUST BE CONNECTED TO EARTH GROUND
3. INSTALLER TO PROVIDE MAIN DISCONNECTING DEVICE WITH SHORT CIRCUIT PROTECTION FOR THIS ELECTRICAL ASSEMBLY. SEE TABLE 1 FOR SIZING INFORMATION.
4. ALL WIRES MUST BE LABELED ON BOTH ENDS
5. TRANSFORMER IS SIZED FOR LOADS SHOWN ON DRAWING ONLY. DO NOT CONNECT ANY OTHER DEVICES

TABLE 1

PANEL DATA 1ø 100VA CONTROL CIRCUIT								
(A) LOAD SPECIFICATIONS						(B) BRANCH CIRCUIT PROTECTION – PROVIDED BY INSTALLER		
PANEL PART NUMBER	MOTOR SIZE EACH	(A) POWER (V/HZ)		(A) MOTOR LOAD EACH (FLA)	PANEL LOAD TOTAL (FLA)	NONTIME DELAY FUSE	TIME-DELAY FUSE	INVERSE-TIME CIRCUIT BREAKER
PSI20025XX	2	208V	1ø	12.6	27.2	60A	40A	50A
PSI20035XX	3	208V	1ø	16.8	35.6	70A	50A	70A
PSI20055XX	5	208V	1ø	24.0	50	100A	70A	90A
PSI20026XX	2	230V	1ø	12	26	50A	35A	45A
PSI20036XX	3	230V	1ø	16.0	34	70A	50A	60A
PSI20056XX	5	230V	1ø	23.0	48	100A	70A	90A
NOTE– ADJUST OVERCURRENT PROTECTION DEVICE NOT TO EXCEED 115% OF MOTOR NAMEPLATE FLA VALUE								
NOTE– FOR STANDARD PRESSURE SYSTEMS, USE PSI200XXAJ PART#, FOR HIGH PRESSURE SYSTEMS, USE PSI200XXHP PART#								

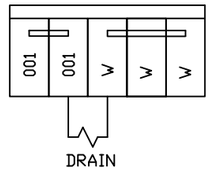

TABLE 2

CONTROL TRANSFORMERS - 100VA

	FUSE TYPE	208 VOLT	230 VOLT	380 VOLT	460 VOLT	575 VOLT
FU1,2	FNQR	2A	2A	1A	1A	0.5A
FU3	FNM	1.25A	1.25A	1.25A	1.25A	1.25A

WIRE TYPE TABLE

VOLTAGE	WIRE NUMBERS	GAUGE	COLOR
120VAC	001-699	16-18AWG	RED/BLK
0VAC	W	16-18AWG	WHT/BLK
24VDC	700-999	16-18AWG	PURPLE
0VDC	701	16-18AWG	PURPLE
GND	-	14 AWG	GREEN
CUSTOMER SUPPLY	01-99	16AWG	YELLOW

OPTIONAL:

POWEREX™

CONFIDENTIAL DISCLOSURE:
This drawing is the property of POWEREX, INC. of Marmon Specialty Products and is subject to return on demand. Its contents are confidential and must not be copied or submitted to outside parties for use or examination.

DRAWN BY	CHECKED BY	ENGINEERING APPROVAL
BFH	CHR	CHR
01/03/12	02/08/12	02/08/12

PANEL TYPE

IND DUP SCROLL

DWG. TYPE WIRING 1PH 208/230V

DWG. NO.

PSI-200

SHEET W-1

SIZE B

PSI-200 H2

REV	REVISION	DATE	ECN	NAME	CHKD
B-1	RELEASE TO PRODUCTION	01/03/12	22722	BFH	CHR
I-1	CHANGED GND TO BE 14 AWG	4/16/25	PXEC0668	MJV	JRD
J-1	UPDATING TERMINAL BLOCKS	9/24/25	PXEC0718	MJV	JA
K-1	ADDING PSI20037XX SPEC	10/1/25	PXEC0668	MJV	JA

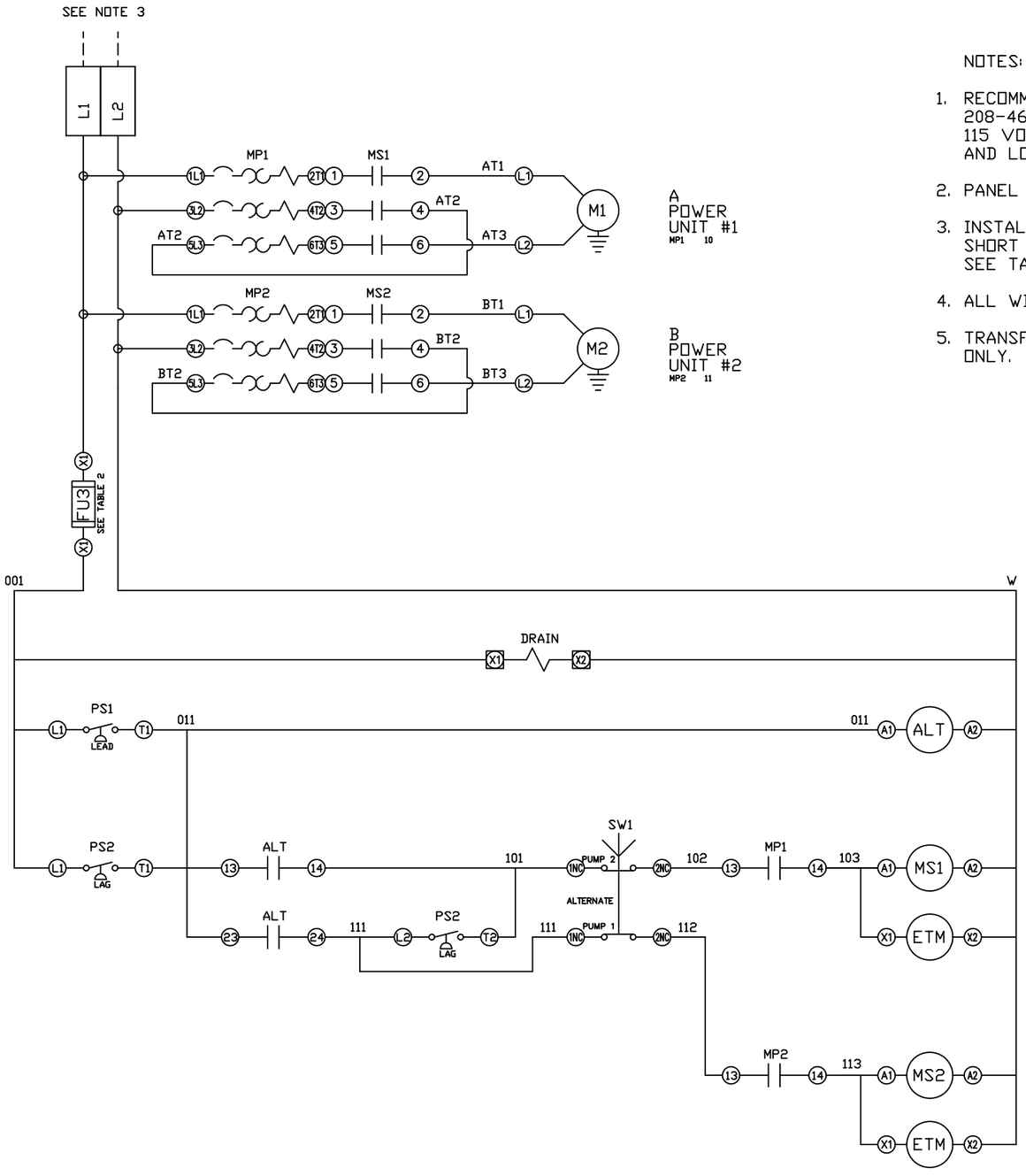

NOTES:

1. RECOMMENDED TIGHTENING TORQUES FOR WIRE TERMINALS:
   208-460 VOLT POWER 35 POUND INCHES
   115 VOLT POWER, CONTROL
   AND LOW VOLTAGE 20 POUND INCHES
2. PANEL GROUND MUST BE CONNECTED TO EARTH GROUND
3. INSTALLER TO PROVIDE MAIN DISCONNECTING DEVICE WITH SHORT CIRCUIT PROTECTION FOR THIS ELECTRICAL ASSEMBLY. SEE TABLE 1 FOR SIZING INFORMATION.
4. ALL WIRES MUST BE LABELED ON BOTH ENDS
5. TRANSFORMER IS SIZED FOR LOADS SHOWN ON DRAWING ONLY. DO NOT CONNECT ANY OTHER DEVICES

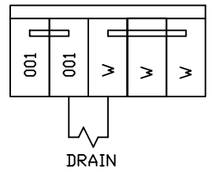

WIRE TYPE TABLE

VOLTAGE	WIRE NUMBERS	GAUGE	COLOR
120VAC	001-699	16-18AWG	RED/BLK
0VAC	W	16-18AWG	WHT/BLK
24VDC	700-999	16-18AWG	PURPLE
0VDC	701	16-18AWG	PURPLE
GND	-	14 AWG	GREEN
CUSTOMER SUPPLY	01-99	16AWG	YELLOW

OPTIONAL:

POWEREX

CONFIDENTIAL DISCLOSURE:
This drawing is the property of POWEREX, INC. of Marmon Specialty Products and is subject to return on demand. Its contents are confidential and must not be copied or submitted to outside parties for use or examination.

DRAWN BY	CHECKED BY	ENGINEERING APPROVAL
BFH	CHR	CHR
01/03/12	02/08/12	02/08/12

PANEL TYPE

IND DUP SCROLL

DWG. TYPE WIRING 1PH 115V

DWG. NO.

PSI-200

SHEET W-1

SIZE B

PSI-200 H2

REV	REVISION	DATE	ECN	NAME	CHKD
B-1	RELEASE TO PRODUCTION	01/03/12	22722	BFH	CHR
I-1	CHANGED GND TO BE 14 AWG	4/16/25	PXEC0668	MJV	JRD
J-1	UPDATING TERMINAL BLOCKS	9/24/25	PXEC0718	MJV	JA
K-1	ADDING PSI20037XX SPEC	10/1/25	PXEC0668	MJV	JA

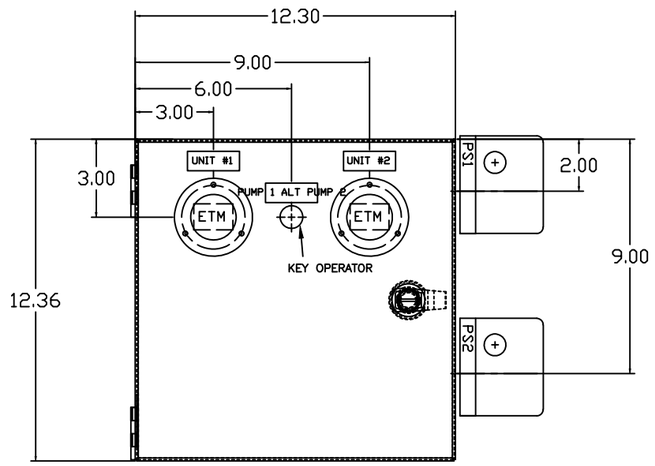

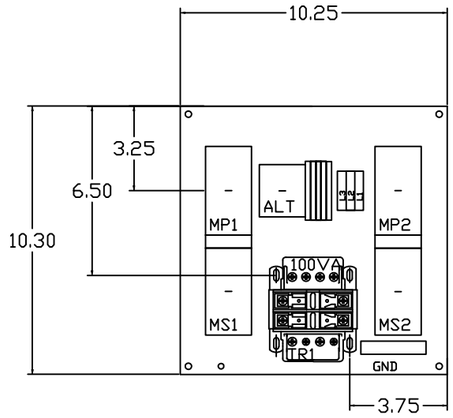

OPTIONAL:

POWEREX

CONFIDENTIAL DISCLOSURE:
This drawing is the property of POWEREX, INC. of Marmon Specialty Products and is subject to return on demand. Its contents are confidential and must not be copied or submitted to outside parties for use or examination.

DRAWN BY	CHECKED BY	ENGINEERING APPROVAL
BFH	CHR	CHR
01/03/12	02/08/12	02/08/12

PANEL TYPE

IND DUP SCROLL

DWG. TYPE LAYOUT

DWG. NO.

PSI-200

SHEET L-1

SIZE B

PSI-200 H2