# STDV0303x2

## 3HP SCROLL TNKMNT DUPLEX VERT 80GV ED

| REVISION NOTES | |
|---|---|
| DESCRIPTION | ECN |
| CHANGED CONDUIT TO ALUMINUM | PXEC0668 |

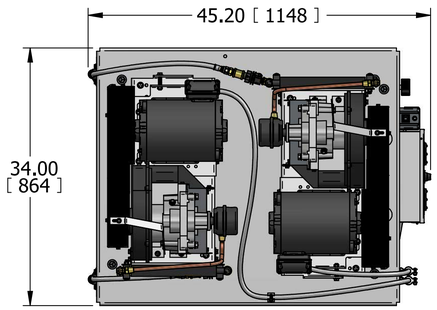


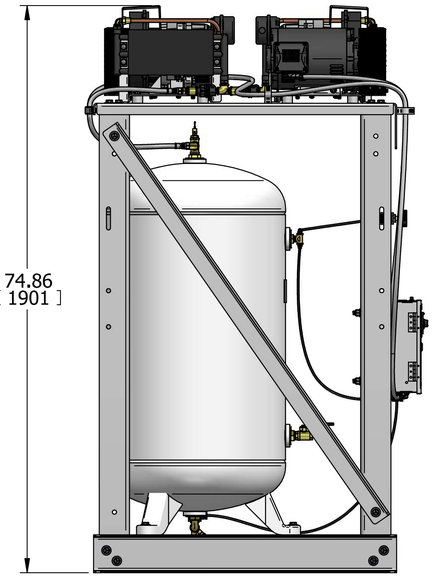


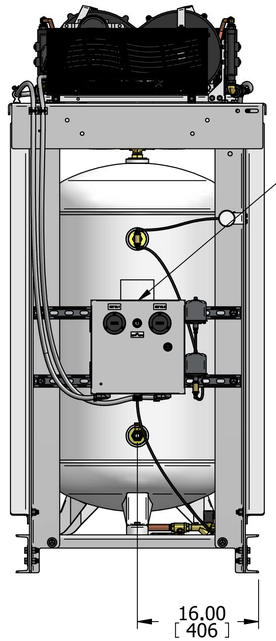


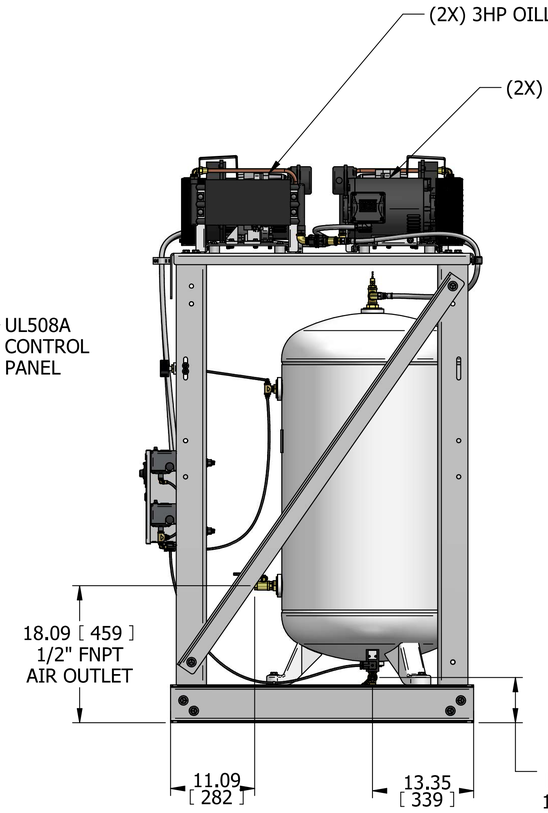


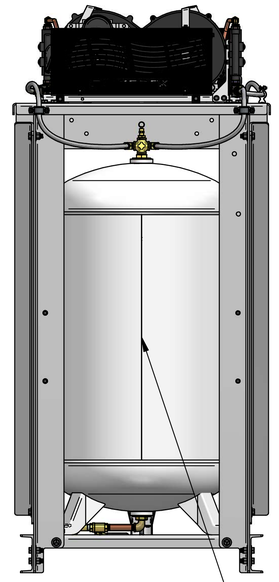


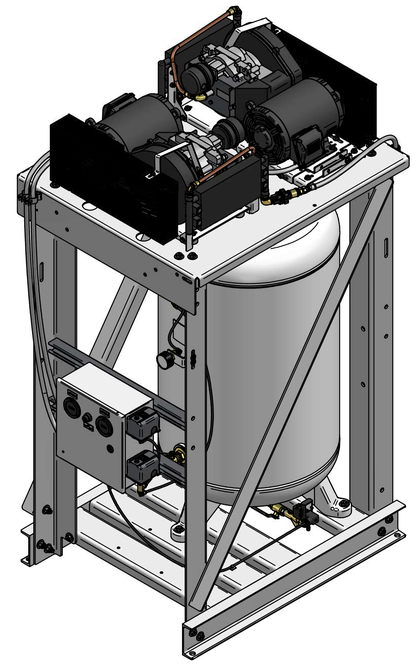

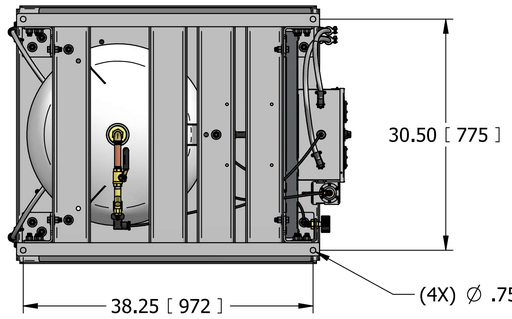


NOTES:
1. APPROXIMATE WEIGHT: 858 LBS
2. DIMENSIONS ARE FOR REFERENCE
3. A MINIMUM OF 24" CLEARANCE IS RECOMMENDED AROUND THE ENTIRE UNIT
4. CLEARANCE FOR CONTROL PANEL SHALL BE IN ACCORDANCE WITH OSHA/NEC REQUIREMENTS

| | | |
|---|---|---|
| SYMBOL LEGEND | | DRAWINGS TO CONFORM TO CURRENT REVISION OF THE FOLLOWING ANSI STANDARDS: Y14.3 MULTI AND SECTIONAL VIEW DWGS Y14.5 DIMENSIONING AND TOLERANCING |
| TOLERANCES, UNLESS OTHERWISE SPECIFIED: 0.XX ± .05; 0.XXX ± .005; ∠ ± 1 | SOLID EDGE DRAWING; INCH [mm] | DO NOT SCALE DRAWING FOR DIMENSIONS; SHEET 1 OF 2; SCALE 1:10 |
| CONFIDENTIAL DISCLOSURE: This drawing is the property of POWEREX INC. of MARMON HOLDINGS, INC., and is subject to return on demand. Its contents are confidential and must not be copied or submitted to outside parties for use or examination. | AUTHOR: Jernigan,Colton | REVISION DATE: 06/09/25; APPROVALS ON FILE IN PLM |
| ITEM ID: 755840 | POWEREX, 150 PRODUCTION DRIVE, HARRISON OH 45030 (888) 769-7979 | |
| MATERIAL: N/A | | |
| DESCRIPTION: 3HP SCROLL TNKMNT DUPLEX VERT 80GV ED | DRAWING NUMBER: STDV0303x2 | REVISION: B; SIZE: D |

# STDV0303x2

3HP SCROLL TNKMNT DUPLEX VERT 80GV ED

| REVISION NOTES | |
|---|---|
| DESCRIPTION | ECN |
| CHANGED CONDUIT TO ALUMINUM | PXEC0668 |

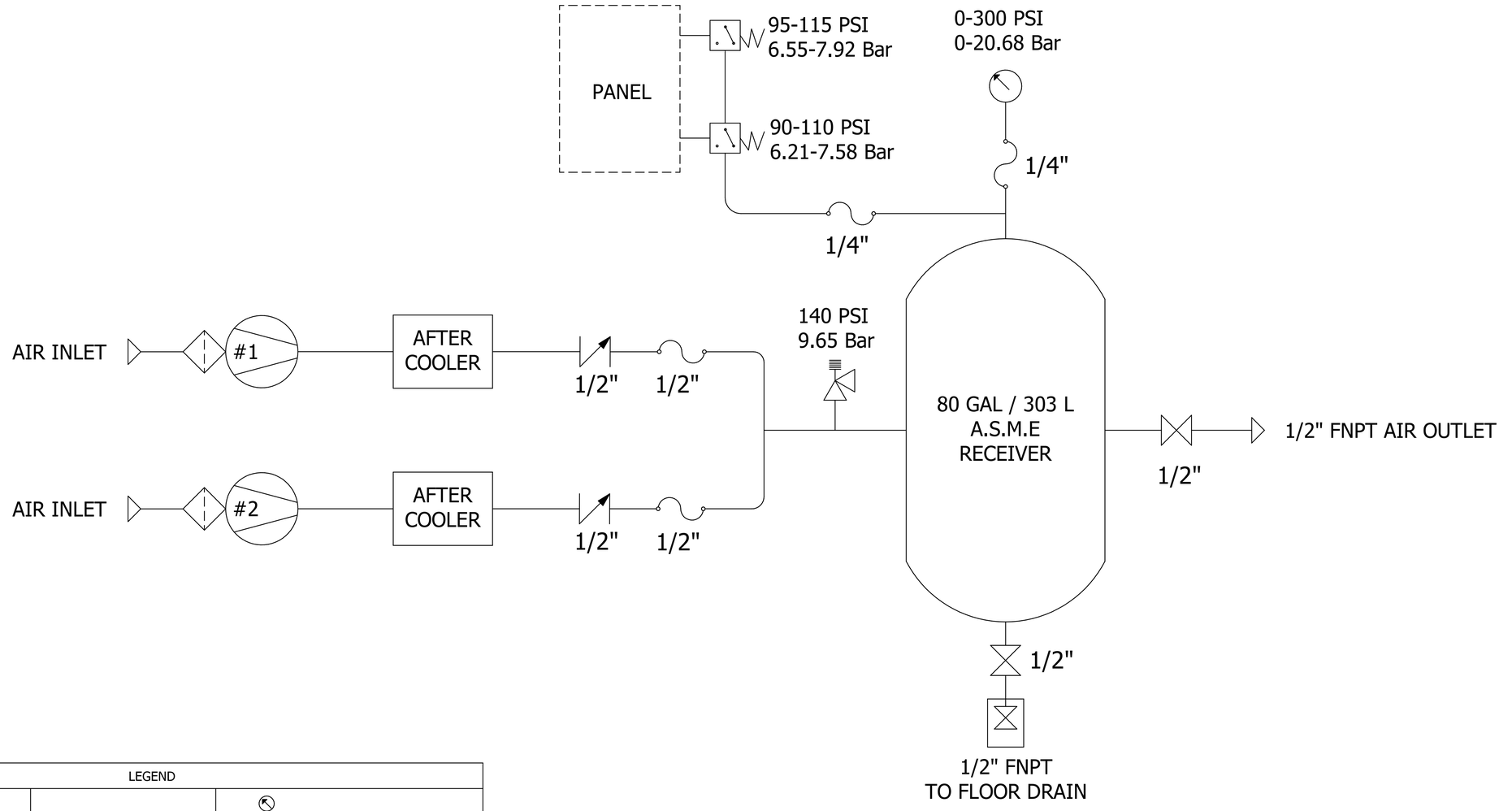


| LEGEND | | |
|---|---|---|
| COMPRESSOR PUMP | INTAKE FILTER | REGULATOR W/ GAUGE |
| RELIEF VALVE | BALL VALVE | TEMPERTURE SWITCH |
| CHECK VALVE | UNION | PRESSURE SWITCH/TRANSDUCER |
| FLEX HOSE | GAUGE | FILTER/SEPERATOR |
| AIR LINE | | |
| CONDENSATE LINE | SHUTTLE VALVE | ELECTRIC AUTO DRAIN |

| | | |
|---|---|---|
| SYMBOL LEGEND | | DRAWINGS TO CONFORM TO CURRENT REVISION OF THE FOLLOWING ANSI STANDARDS: Y14.3 MULTI AND SECTIONAL VIEW DWGS Y14.5 DIMENSIONING AND TOLERANCING |
| TOLERANCES, UNLESS OTHERWISE SPECIFIED: 0.XX ± .05; 0.XXX ± .005; ∠ ± 1 | SOLID EDGE DRAWING | DO NOT SCALE DRAWING FOR DIMENSIONS |
| | INCH [mm] | SHEET 2 OF 2 — SCALE 1:1 |

CONFIDENTIAL DISCLOSURE
This drawing is the property of POWEREX INC. of MARMON HOLDINGS, INC., and is subject to return on demand. Its contents are confidential and must not be copied or submitted to outside parties for use or examination.

| AUTHOR | REVISION DATE | APPROVALS ON FILE IN PLM |
|---|---|---|
| Jernigan,Colton | 06/09/25 | |

ITEM ID: 755840
MATERIAL: N/A
DESCRIPTION: 3HP SCROLL TNKMNT DUPLEX VERT 80GV ED

POWEREX®
150 PRODUCTION DRIVE, HARRISON OH 45030
(888) 769-7979

| DRAWING NUMBER | REVISION | SIZE |
|---|---|---|
| STDV0303x2 | B | D |