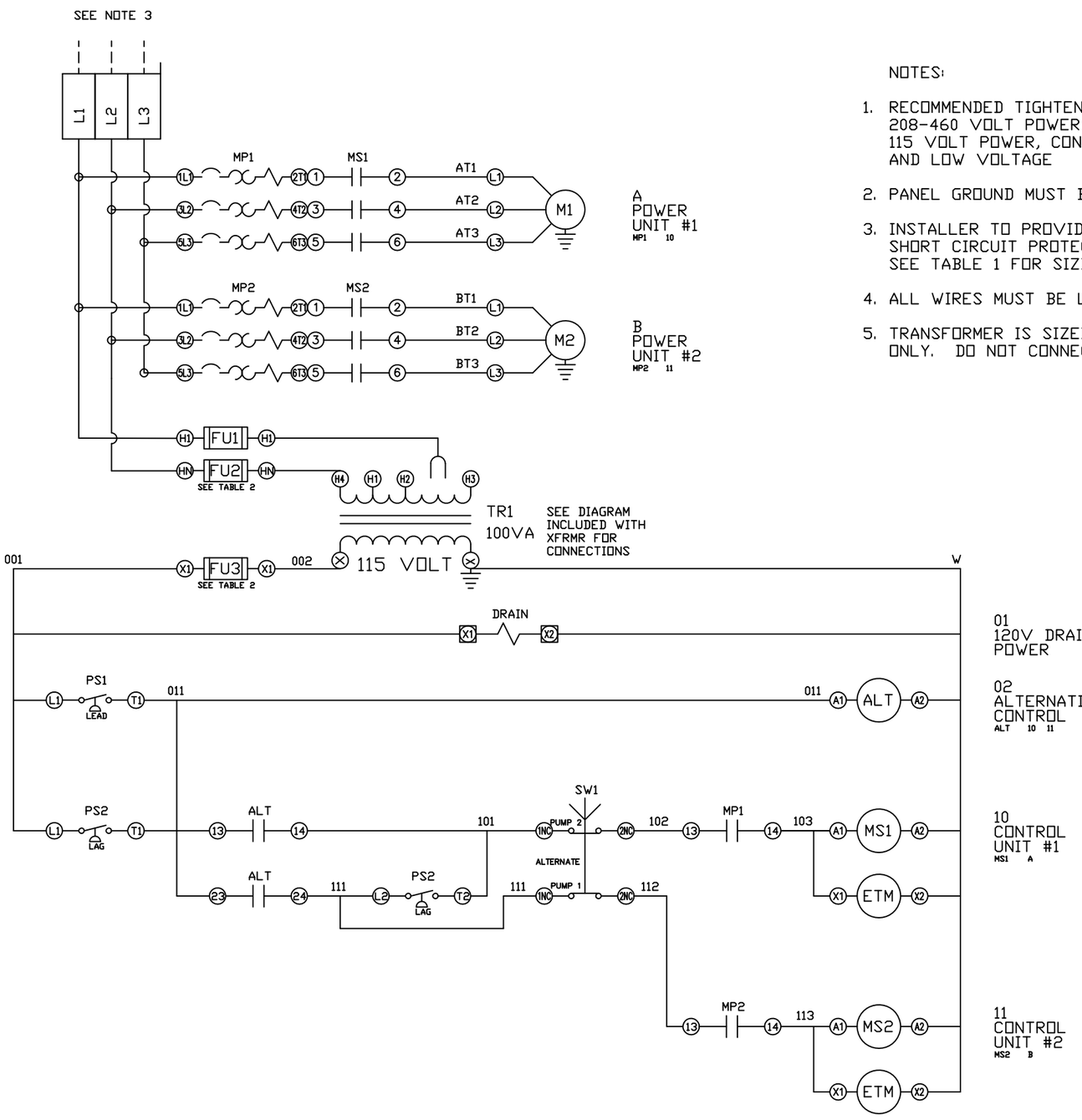

REV	REVISION	DATE	ECN	NAME	CHKD
B-1	RELEASE TO PRODUCTION	01/03/12	22722	BFH	CHR
I-1	CHANGED GND TO BE 14 AWG	4/16/25	PXEC0668	MJV	JRD
J-1	UPDATING TERMINAL BLOCKS	9/24/25	PXEC0718	MJV	JA
K-1	ADDING PSI20037XX SPEC	10/1/25	PXEC0668	MJV	JA

NOTES:

1. RECOMMENDED TIGHTENING TORQUES FOR WIRE TERMINALS:
   208-460 VOLT POWER 35 POUND INCHES
   115 VOLT POWER, CONTROL
   AND LOW VOLTAGE 20 POUND INCHES
2. PANEL GROUND MUST BE CONNECTED TO EARTH GROUND
3. INSTALLER TO PROVIDE MAIN DISCONNECTING DEVICE WITH SHORT CIRCUIT PROTECTION FOR THIS ELECTRICAL ASSEMBLY. SEE TABLE 1 FOR SIZING INFORMATION.
4. ALL WIRES MUST BE LABELED ON BOTH ENDS
5. TRANSFORMER IS SIZED FOR LOADS SHOWN ON DRAWING ONLY. DO NOT CONNECT ANY OTHER DEVICES

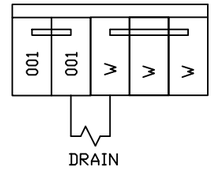

WIRE TYPE TABLE			
VOLTAGE	WIRE NUMBERS	GAUGE	COLOR
120VAC	001-699	16-18AWG	RED/BLK
0VAC	W	16-18AWG	WHT/BLK
24VDC	700-999	16-18AWG	PURPLE
0VDC	701	16-18AWG	PURPLE
GND	-	14 AWG	GREEN
CUSTOMER SUPPLY	01-99	16AWG	YELLOW

OPTIONAL:

POWEREX

CONFIDENTIAL DISCLOSURE:
This drawing is the property of POWEREX, INC. of Marmon Specialty Products and is subject to return on demand. Its contents are confidential and must not be copied or submitted to outside parties for use or examination.

DRAWN BY	CHECKED BY	ENGINEERING APPROVAL
BFH	CHR	CHR
01/03/12	02/08/12	02/08/12

PANEL TYPE

IND DUP SCROLL

DWG. TYPE WIRING 3PH

DWG. NO.

PSI-200

SHEET W-1

SIZE B

PSI-200 H2

TABLE 2

CONTROL TRANSFORMERS - 100VA

	FUSE TYPE	208 VOLT	230 VOLT	380 VOLT	460 VOLT	575 VOLT
FU1,2	FNQR	2A	2A	1A	1A	0.5A
FU3	FNM	1.25A	1.25A	1.25A	1.25A	1.25A

REV	REVISION	DATE	ECN	NAME	CHKD
B-1	RELEASE TO PRODUCTION	01/03/12	22722	BFH	CHR
I-1	CHANGED GND TO BE 14 AWG	4/16/25	PXEC0668	MJV	JRD
J-1	UPDATING TERMINAL BLOCKS	9/24/25	PXEC0718	MJV	JA
K-1	ADDING PSI20037XX SPEC	10/1/25	PXEC0668	MJV	JA

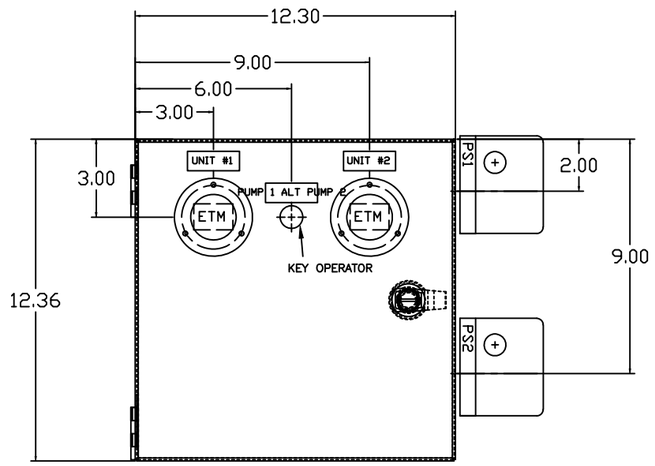

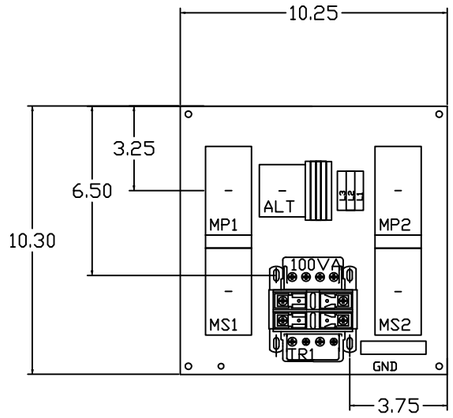

OPTIONAL:

POWEREX

CONFIDENTIAL DISCLOSURE:
This drawing is the property of POWEREX, INC. of Marmon Specialty Products and is subject to return on demand. Its contents are confidential and must not be copied or submitted to outside parties for use or examination.

DRAWN BY	CHECKED BY	ENGINEERING APPROVAL
BFH	CHR	CHR
01/03/12	02/08/12	02/08/12

PANEL TYPE

IND DUP SCROLL

DWG. TYPE LAYOUT

DWG. NO.

PSI-200

SHEET L-1

SIZE B

PSI-200 H2

REV	REVISION	DATE	ECN	NAME	CHKD
B-1	RELEASE TO PRODUCTION	01/03/12	22722	BFH	CHR
I-1	CHANGED GND TO BE 14 AWG	4/16/25	PXEC0668	MJV	JRD
J-1	UPDATING TERMINAL BLOCKS	9/24/25	PXEC0718	MJV	JA
K-1	ADDING PSI20037XX SPEC	10/1/25	PXEC0668	MJV	JA

TABLE 1

PANEL DATA 3Ø
100VA CONTROL CIRCUIT

(A) LOAD SPECIFICATIONS					(B) BRANCH CIRCUIT PROTECTION – PROVIDED BY INSTALLER		
PANEL PART NUMBER	MOTOR SIZE EACH	(A) POWER (V/HZ)	(A) MOTOR LOAD EACH (FLA)	PANEL LOAD TOTAL (FLA)	NONTIME DELAY FUSE	TIME-DELAY FUSE	INVERSE-TIME CIRCUIT BREAKER
PSI2003EAJ	3	200V/60HZ	8.88	19.8	40A	30A	35A
PSI20058XX	5	380V/60HZ	7.6	17.2	35A	25A	30A
PSI20022XX	2	208V/60HZ	7.5	17	30A	20A	30A
PSI20032XX	3	208V/60HZ	8.8	18.1	40A	25A	35A
PSI20052XX	5	208V/60HZ	14.0	30	60A	45A	60A
PSI20072XX	7.5	208V/60HZ	19.2	40.4	80A	60A	70A
PSI200A2XX	10	208V/60HZ	26.5	55	110A	80A	100A
PSI20033XX	3	230V/60HZ	7.7	17.4	35A	25A	30A
PSI20053XX	5	230V/60HZ	12.7	27.4	60A	25A	50A
PSI20073XX	7.5	230V/60HZ	17.9	37.8	80A	60A	70A
PSI200A3XX	10	230V/60HZ	24.0	50	100A	70A	90A
PSI20024XX	2	460V/60HZ	3.4	8	15A	10A	15A
PSI20034XX	3	460V/60HZ	3.9	9.8	20A	15A	20A
PSI20054XX	5	460V/60HZ	6.3	14.6	30A	20A	25A
PSI20074XX	7.5	460V/60HZ	8.97	19.9	40A	30A	35A
PSI200A4XX	10	460V/60HZ	12.0	26	50A	35A	45A
PSI20038XX	3	380V/50HZ	4.6	11.2	25A	15A	20A
PSI20058XX	5	380V/50HZ	7.7	17.4	35A	25A	30A
PSI20078XX	7.5	380V/50HZ	10.7	23.4	45A	35A	40A
PSI200A8XX	10	380V/50HZ	14.5	31	60A	45A	60A

NOTE– ADJUST OVERCURRENT PROTECTION DEVICE NOT TO EXCEED 115% OF MOTOR NAMEPLATE FLA VALUE

NOTE– FOR STANDARD PRESSURE SYSTEMS, USE PSI200XXAJ PART#.
FOR HIGH PRESSURE SYSTEMS, USE PSI200XXHP PART#

WIRE TYPE TABLE

VOLTAGE	WIRE NUMBERS	GAUGE	COLOR
120VAC	001-699	16-18AWG	RED/BLK
0VAC	W	16-18AWG	WHT/BLK
24VDC	700-999	16-18AWG	PURPLE
0VDC	701	16-18AWG	PURPLE
GND	-	14 AWG	GREEN
CUSTOMER SUPPLY	01-99	16AWG	YELLOW

OPTIONAL:

TABLE 2

CONTROL TRANSFORMERS - 100VA

	FUSE TYPE	208 VOLT	230 VOLT	380 VOLT	460 VOLT	575 VOLT
FU1,2	FNQR	2A	2A	1A	1A	0.5A
FU3	FNM	1.25A	1.25A	1.25A	1.25A	1.25A

POWEREX

CONFIDENTIAL DISCLOSURE:
This drawing is the property of POWEREX, INC. of Marmon Specialty Products and is subject to return on demand. Its contents are confidential and must not be copied or submitted to outside parties for use or examination.

DRAWN BY	CHECKED BY	ENGINEERING APPROVAL
BFH	CHR	CHR
01/03/12	02/08/12	02/08/12

PANEL TYPE

IND DUP SCROLL

DWG. TYPE DATA

DWG. NO.

PSI-200

SHEET D-2

PSI-200 H2

SIZE B

REV	REVISION	DATE	ECN	NAME	CHKD
B-1	RELEASE TO PRODUCTION	01/03/12	22722	BFH	CHR
I-1	CHANGED GND TO BE 14 AWG	4/16/25	PXEC0668	MJV	JRD
J-1	UPDATING TERMINAL BLOCKS	9/24/25	PXEC0718	MJV	JA
K-1	ADDING PSI20037XX SPEC	10/1/25	PXEC0668	MJV	JA

TABLE 1

PANEL DATA 3ø – 60 Hz 100VA CONTROL CIRCUIT					(B) BRANCH CIRCUIT PROTECTION – PROVIDED BY INSTALLER		
PANEL PART NUMBER	MOTOR SIZE EACH	(A) POWER (V/PH)	(A) MOTOR LOAD EACH (FLA)	PANEL LOAD TOTAL (FLA)	NONTIME DELAY FUSE	TIME-DELAY FUSE	INVERSE-TIME CIRCUIT BREAKER
PSI20037XX	3	575V 3ø	3.09	6.4	15A	15A	15A
PSI20057XX	5	575V 3ø	5.06	12.10	25A	20A	20A
PSI20077XX	7.5	575V 3ø	6.49	15	30A	20A	25A
PSI200B7XX	10	575V 3ø	9.6	21.2	45A	30A	40A
NOTE– ADJUST OVERCURRENT PROTECTION DEVICE NOT TO EXCEED 115% OF MOTOR NAMEPLATE FLA VALUE							
NOTE– FOR STANDARD PRESSURE SYSTEMS, USE PSI200XXAJ PART#, FOR HIGH PRESSURE SYSTEMS, USE PSI200XXHP PART#							

WIRE TYPE TABLE

VOLTAGE	WIRE NUMBERS	GAUGE	COLOR
120VAC	001-699	16-18AWG	RED/BLK
0VAC	W	16-18AWG	WHT/BLK
24VDC	700-999	16-18AWG	PURPLE
0VDC	701	16-18AWG	PURPLE
GND	-	14 AWG	GREEN
CUSTOMER SUPPLY	01-99	16AWG	YELLOW

OPTIONAL:

TABLE 2

CONTROL TRANSFORMERS - 100VA

	FUSE TYPE	208 VOLT	230 VOLT	380 VOLT	460 VOLT	575 VOLT
FU1,2	FNQR	2A	2A	1A	1A	0.5A
FU3	FNM	1.25A	1.25A	1.25A	1.25A	1.25A

POWEREX™

CONFIDENTIAL DISCLOSURE:
This drawing is the property of POWEREX, INC. of Marmon Specialty Products and is subject to return on demand. Its contents are confidential and must not be copied or submitted to outside parties for use or examination.

DRAWN BY	CHECKED BY	ENGINEERING APPROVAL
BFH	CHR	CHR
01/03/12	02/08/12	02/08/12

PANEL TYPE

IND DUP SCROLL

DWG. TYPE DATA

DWG. NO.

PSI-200

SHEET D-3

SIZE B

PSI-200 H2