STDV0503x2

5HP SCROLL TNKMNT DUPLEX VERT 80GV ED

REVISION NOTES	
DESCRIPTION	ECN
CHANGED CONDUIT TO ALUMINUM	PXEC0668

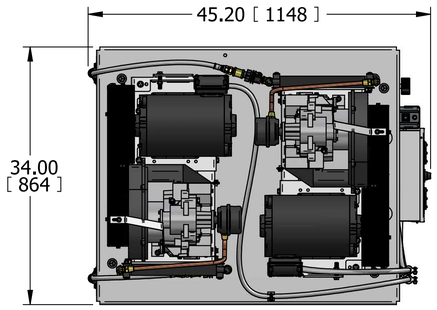

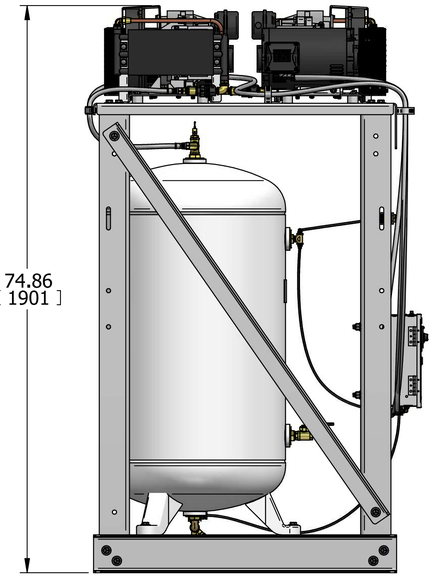

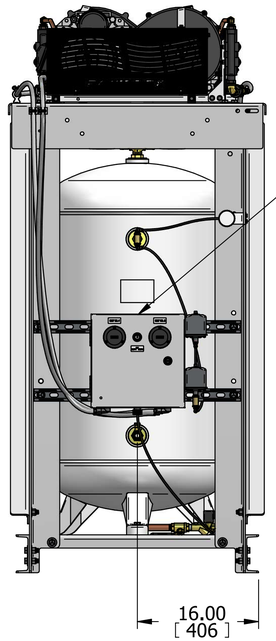

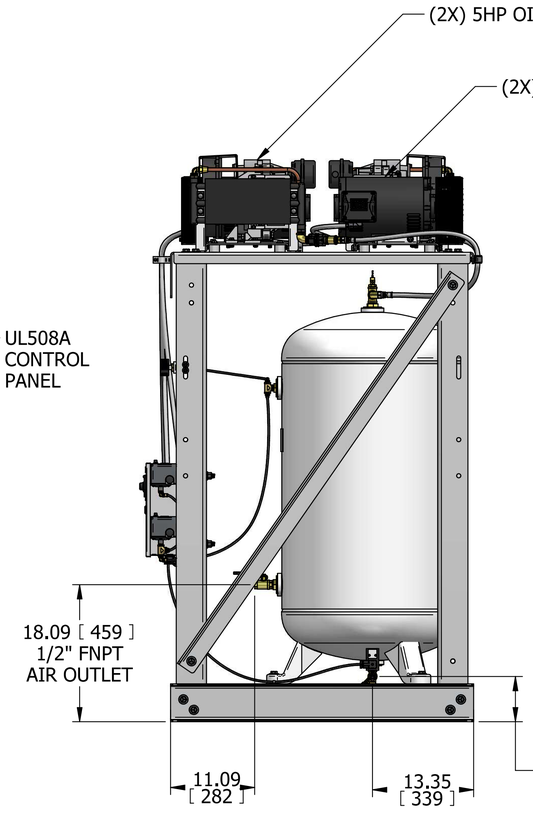

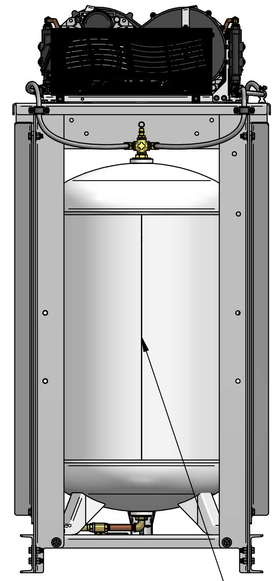

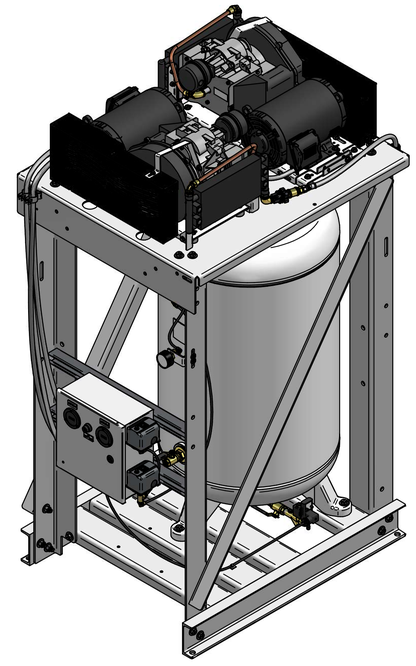

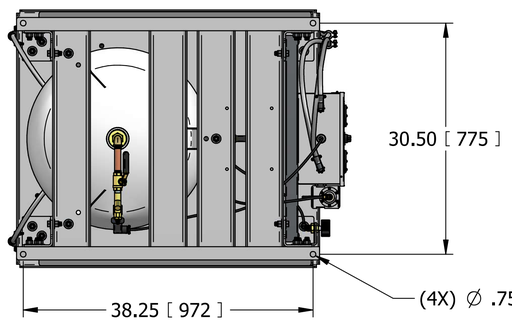

NOTES:
1. APPROXIMATE WEIGHT: 902 LBS
2. DIMENSIONS ARE FOR REFERENCE
3. A MINIMUM OF 24" CLEARANCE IS RECOMMENDED AROUND THE ENTIRE UNIT
4. CLEARANCE FOR CONTROL PANEL SHALL BE IN ACCORDANCE WITH OSHA/NEC REQUIREMENTS

SYMBOL LEGEND		DRAWINGS TO CONFORM TO CURRENT REVISION OF THE FOLLOWING ANSI STANDARDS: Y14.3 MULTI AND SECTIONAL VIEW DWGS Y14.5 DIMENSIONING AND TOLERANCING
TOLERANCES: UNLESS OTHERWISE SPECIFIED 0.XX ± .05 0.XXX ± .005 ∠ ± 1	SOLID EDGE DRAWING INCH [mm]	DO NOT SCALE DRAWING FOR DIMENSIONS SHEET 1 OF 2 — SCALE 1:10
CONFIDENTIAL DISCLOSURE This drawing is the property of POWEREX INC. of MARMON HOLDINGS, INC., and is subject to return on demand. Its contents are confidential and must not be copied or submitted to outside parties for use or examination.	AUTHOR: Jernigan,Colton REVISION DATE: 06/10/25 APPROVALS ON FILE IN PLM	
ITEM ID: 755639 MATERIAL: N/A	POWEREX® 150 PRODUCTION DRIVE, HARRISON OH 45030 (888) 769-7979	
DESCRIPTION: 5HP SCROLL TNKMNT DUPLEX VERT 80GV ED	DRAWING NUMBER: STDV0503x2 REVISION: B SIZE: D	

STDV0503x2

5HP SCROLL TNKMNT DUPLEX VERT 80GV ED

REVISION NOTES	
DESCRIPTION	ECN
CHANGED CONDUIT TO ALUMINUM	PXEC0668

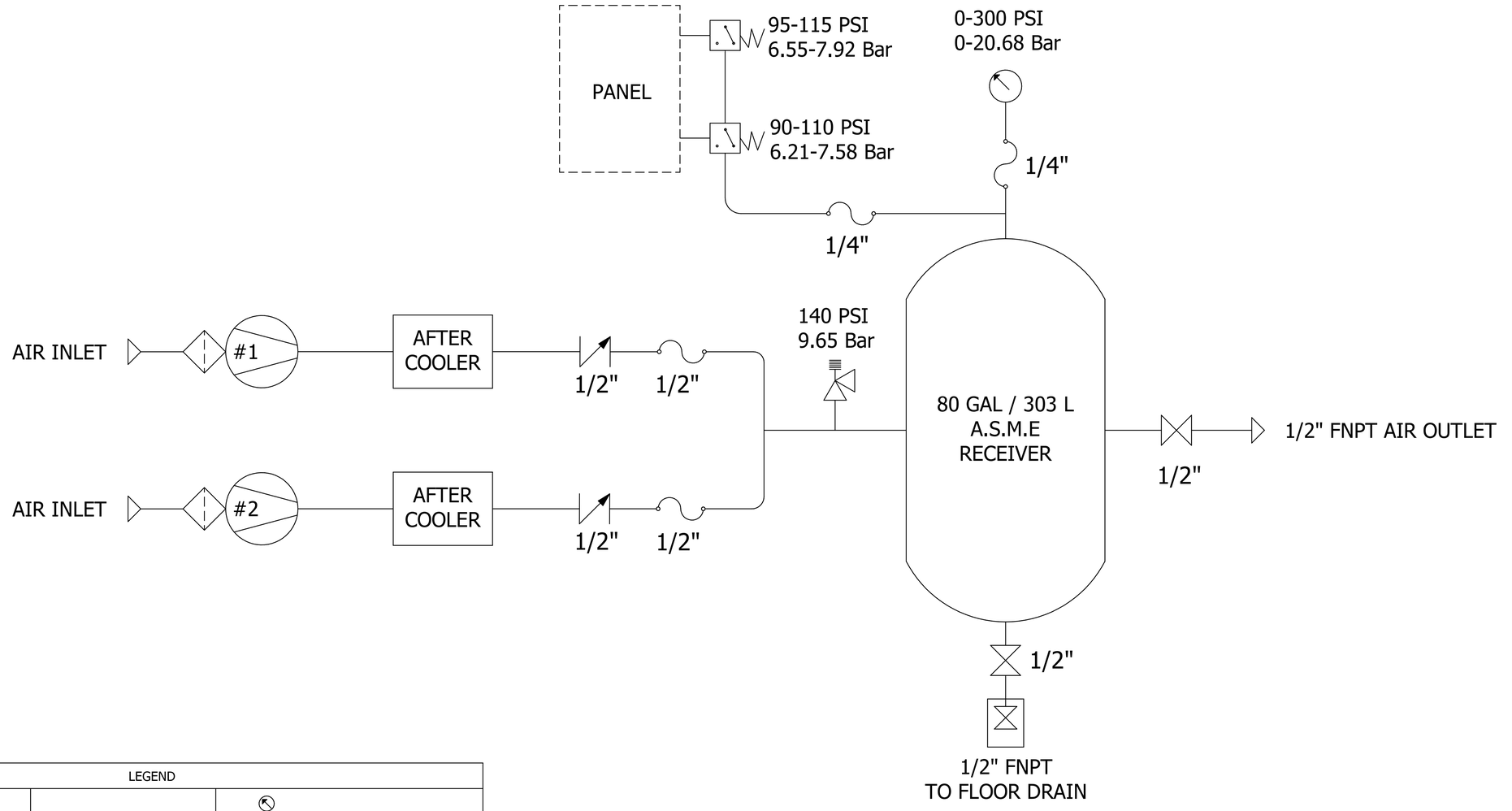

LEGEND		
COMPRESSOR PUMP	INTAKE FILTER	REGULATOR W/ GAUGE
RELIEF VALVE	BALL VALVE	TEMPERTURE SWITCH
CHECK VALVE	UNION	PRESSURE SWITCH/TRANSDUCER
FLEX HOSE	GAUGE	FILTER/SEPERATOR
AIR LINE		
CONDENSATE LINE	SHUTTLE VALVE	ELECTRIC AUTO DRAIN

SYMBOL LEGEND		DRAWINGS TO CONFORM TO CURRENT REVISION OF THE FOLLOWING ANSI STANDARDS: Y14.3 MULTI AND SECTIONAL VIEW DWGS Y14.5 DIMENSIONING AND TOLERANCING
TOLERANCES, UNLESS OTHERWISE SPECIFIED: 0.XX ± .05; 0.XXX ± .005; ∠ ± 1	SOLID EDGE DRAWING; INCH [mm]	DO NOT SCALE DRAWING FOR DIMENSIONS; SHEET 2 OF 2; SCALE 1:1
CONFIDENTIAL DISCLOSURE This drawing is the property of POWEREX INC. of MARMON HOLDINGS, INC., and is subject to return on demand. Its contents are confidential and must not be copied or submitted to outside parties for use or examination.	AUTHOR: Jernigan,Colton	REVISION DATE: 06/10/25; APPROVALS ON FILE IN PLM
ITEM ID: 755639; MATERIAL: N/A	POWEREX 150 PRODUCTION DRIVE, HARRISON OH 45030 (888) 769-7979	
DESCRIPTION: 5HP SCROLL TNKMNT DUPLEX VERT 80GV ED	DRAWING NUMBER: STDV0503x2	REVISION: B; SIZE: D