# STS0301x2

## 3HP/3P SCROLL TANKMOUNT SIMPLEX 30GH ED

| REVISION NOTES | | |
|---|---|---|
| DESCRIPTION | ECN | PR/NOR |
| PRI-100 STANDARDIZATION | PXEC0618 | N/A |

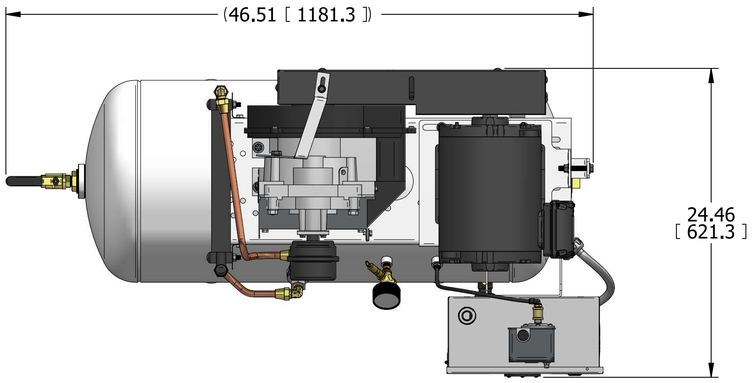


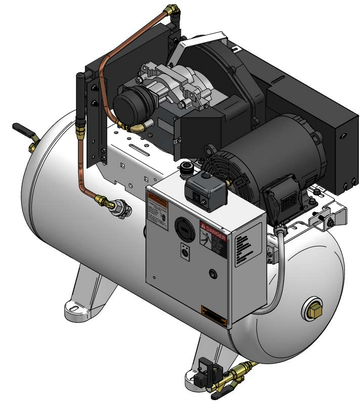

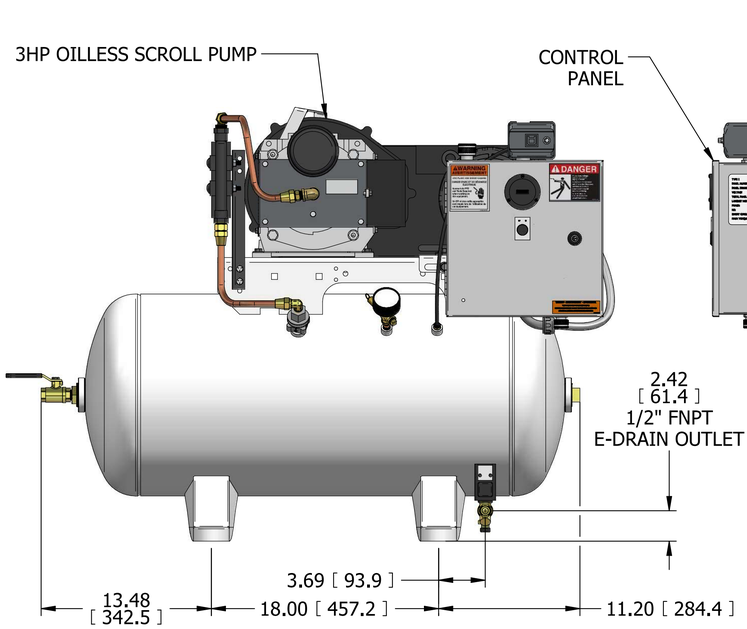


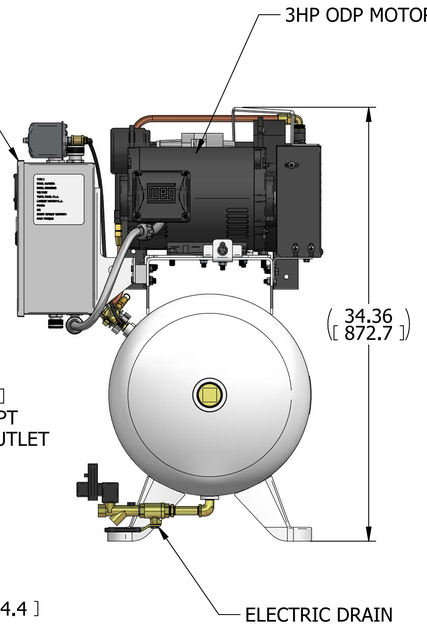


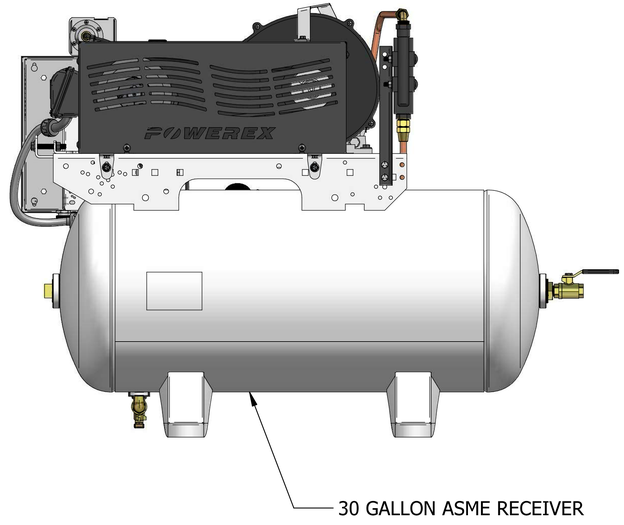


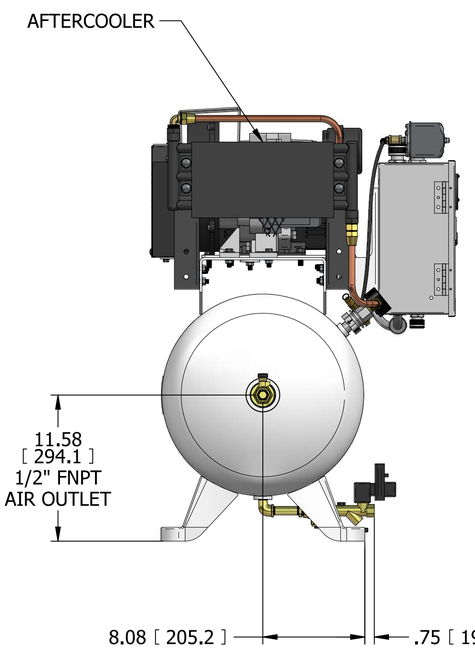


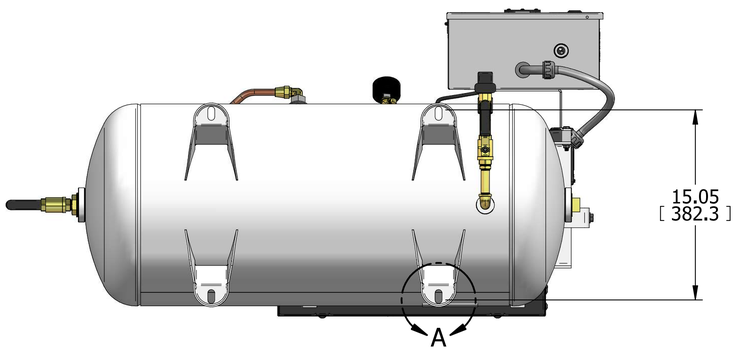


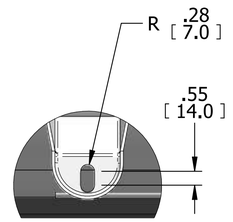


(4X) DETAIL A

NOTES:
1. APPROXIMATE WEIGHT: 254 lb (116 kg)
2. A MINIMUM OF 24" CLEARANCE IS RECOMMENDED AROUND THE ENTIRE UNIT. CLEARANCE FOR CONTROL PANEL SHALL BE IN ACCORDANCE WITH OSHA/NEC REQUIREMENTS

| | | |
|---|---|---|
| SYMBOL LEGEND | | DRAWINGS TO CONFORM TO CURRENT REVISION OF THE FOLLOWING ANSI STANDARDS: Y14.3 MULTI AND SECTIONAL VIEW DWGS Y14.5 DIMENSIONING AND TOLERANCING |
| TOLERANCES, UNLESS OTHERWISE SPECIFIED 0.XX ± .05; 0.XXX ± .005; ∠ ± 1 | SOLID EDGE DRAWING; INCH [mm] | DO NOT SCALE DRAWING FOR DIMENSIONS; SHEET 1 OF 2; SCALE 1:6 |
| CONFIDENTIAL DISCLOSURE This drawing is the property of POWEREX of the SCOTT FETZER COMPANY and is subject to return on demand. Its contents are confidential and must not be copied or submitted to outside parties for use or examination. | AUTHOR: PMELEEK | REVISION DATE: 11/12/2024; APPROVALS ON FILE IN PLM |
| ITEM ID: 739186; MATERIAL: N/A | POWEREX 150 PRODUCTION DRIVE, HARRISON OH 45030 (888) 769-7979 | |
| DESCRIPTION: 3HP/3P SCROLL TANKMOUNT SIMPLEX 30GH ED | DRAWING NUMBER: STS0301x2 | REVISION: C; SIZE: D |

# STS0301x2

## 3HP/3P SCROLL TANKMOUNT SIMPLEX 30GH ED

| REVISION NOTES | | |
|---|---|---|
| DESCRIPTION | ECN | PR/NOR |
| PRI-100 STANDARDIZATION | PXEC0618 | N/A |

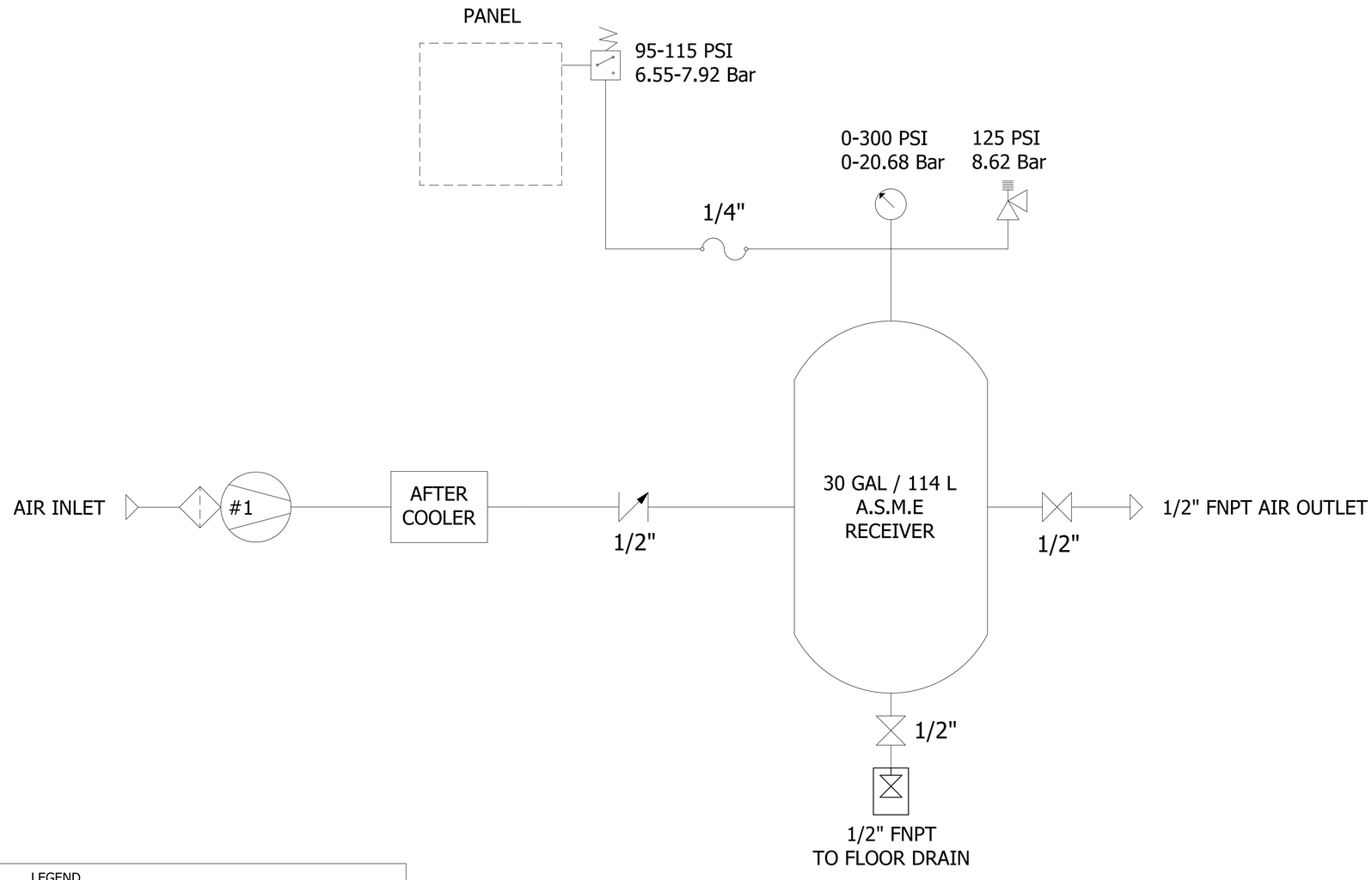


| LEGEND | | |
|---|---|---|
| COMPRESSOR PUMP | INTAKE FILTER | REGULATOR W/ GAUGE |
| RELIEF VALVE | BALL VALVE | TEMPERTURE SWITCH |
| CHECK VALVE | UNION | PRESSURE SWITCH/TRANSDUCER |
| FLEX HOSE | GAUGE | FILTER/SEPERATOR |
| AIR LINE | SHUTTLE VALVE | ELECTRIC AUTO DRAIN |
| CONDENSATE LINE | | |

| | | |
|---|---|---|
| SYMBOL LEGEND | | DRAWINGS TO CONFORM TO CURRENT REVISION OF THE FOLLOWING ANSI STANDARDS: Y14.3 MULTI AND SECTIONAL VIEW DWGS Y14.5 DIMENSIONING AND TOLERANCING |
| TOLERANCES, UNLESS OTHERWISE SPECIFIED: 0.XX ± .05; 0.XXX ± .005; ∠ ± 1 | SOLID EDGE DRAWING | DO NOT SCALE DRAWING FOR DIMENSIONS |
| | INCH [mm] | SHEET 2 OF 2 — SCALE 1:1 |

CONFIDENTIAL DISCLOSURE
This drawing is the property of POWEREX of the SCOTT FETZER COMPANY and is subject to return on demand. Its contents are confidential and must not be copied or submitted to outside parties for use or examination.

| AUTHOR | REVISION DATE | APPROVALS ON FILE IN PLM |
|---|---|---|
| PMELEEK | 11/12/2024 | |

ITEM ID: 739186
MATERIAL: N/A
DESCRIPTION: 3HP/3P SCROLL TANKMOUNT SIMPLEX 30GH ED

POWEREX
150 PRODUCTION DRIVE, HARRISON OH 45030
(888) 769-7979

DRAWING NUMBER: STS0301x2 | REVISION: C | SIZE: D