STS0501x2

5HP/3P SCROLL TANKMOUNT SIMPLEX 30GH ED

REVISION NOTES		
DESCRIPTION	ECN	PR/NOR
PSI-100 STANDARDIZATION	PXEC0618	N/A

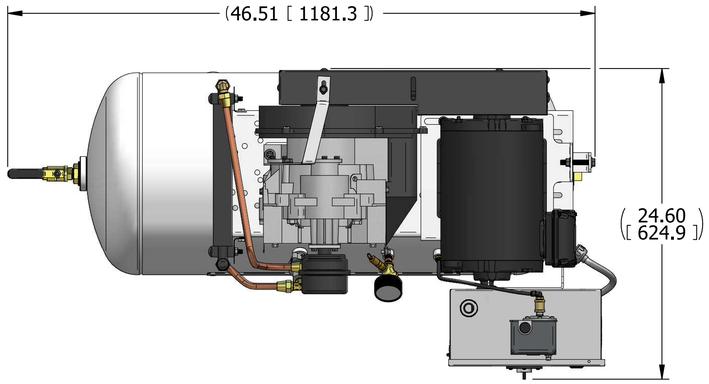

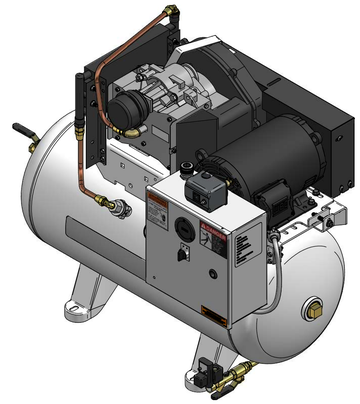

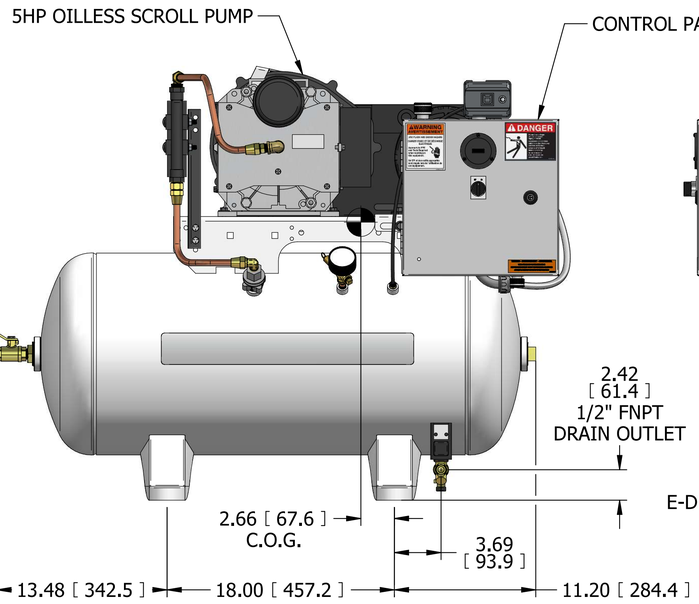

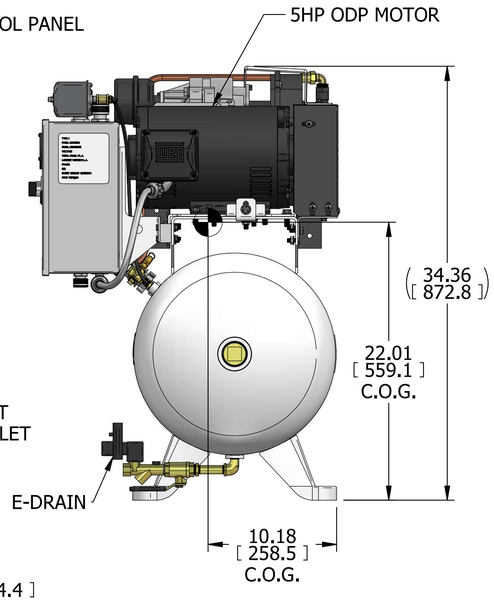

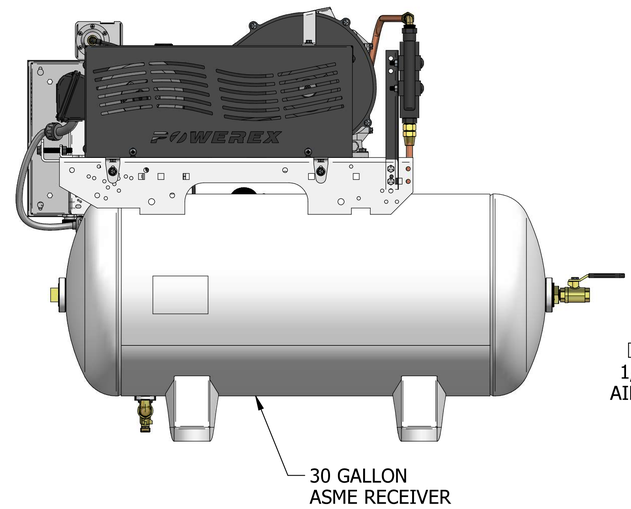

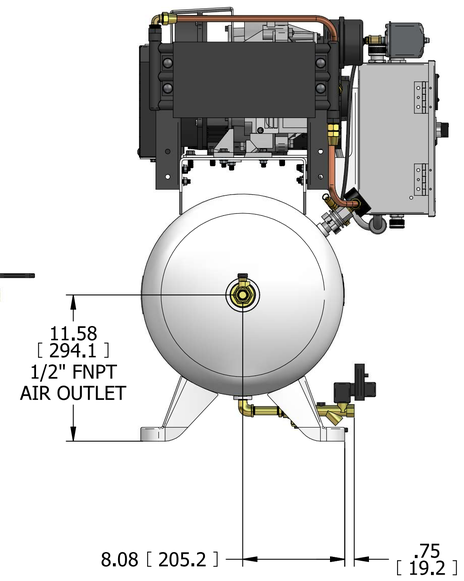

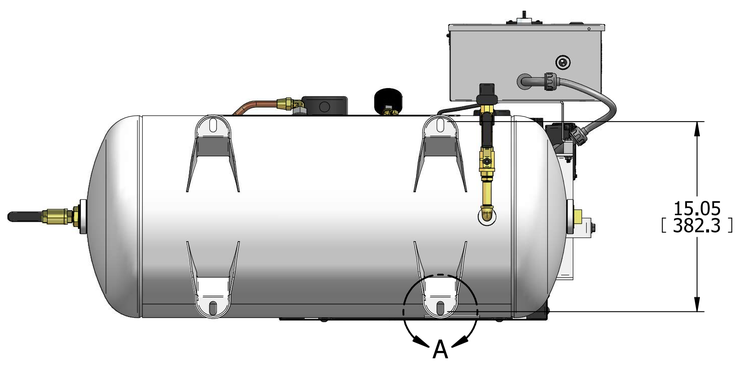

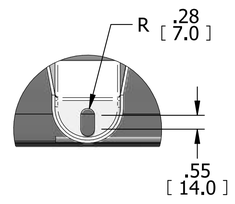

(4X) DETAIL A

NOTES:
1. APPROXIMATE WEIGHT: 291 lb (609 kg)
2. A MINIMUM OF 24" CLEARANCE IS RECOMMENDED AROUND THE ENTIRE UNIT. CLEARANCE FOR CONTROL PANEL SHALL BE IN ACCORDANCE WITH OSHA/NEC REQUIREMENTS

SYMBOL LEGEND		DRAWINGS TO CONFORM TO CURRENT REVISION OF THE FOLLOWING ANSI STANDARDS: Y14.3 MULTI AND SECTIONAL VIEW DWGS Y14.5 DIMENSIONING AND TOLERANCING
TOLERANCES, UNLESS OTHERWISE SPECIFIED: 0.XX ± .05; 0.XXX ± .005; ∠ ± 1	SOLID EDGE DRAWING	DO NOT SCALE DRAWING FOR DIMENSIONS
	INCH [mm]	SHEET 1 OF 2 — SCALE 1:6

CONFIDENTIAL DISCLOSURE
This drawing is the property of POWEREX INC. of MARMON SPECIALTY PRODUCTS and is subject to return on demand. Its contents are confidential and must not be copied or submitted to outside parties for use or examination.

AUTHOR	REVISION DATE	APPROVALS ON FILE IN PLM
rkrishnaprasad	11/28/24	

ITEM ID: 747824
MATERIAL: N/A
DESCRIPTION: 5HP/3P SCROLL TANKMOUNT SIMPLEX 30GH ED

POWEREX
150 PRODUCTION DRIVE, HARRISON OH 45030
(888) 769-7979

DRAWING NUMBER	REVISION	SIZE
STS0501x2	C	D

STS0501x2

5HP/3P SCROLL TANKMOUNT SIMPLEX 30GH ED

REVISION NOTES		
DESCRIPTION	ECN	PR/NOR
PSI-100 STANDARDIZATION	PXEC0618	N/A

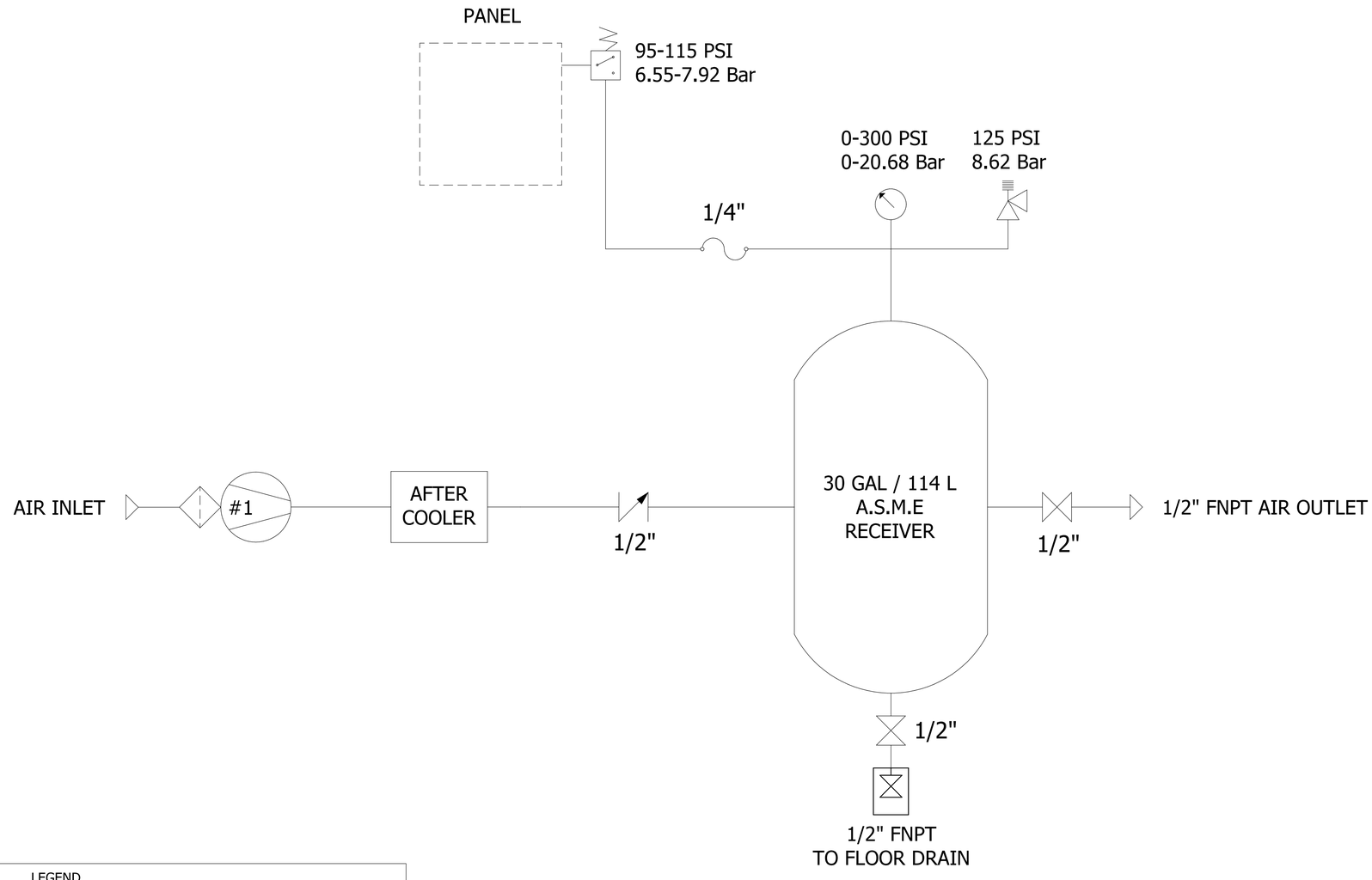

LEGEND		
COMPRESSOR PUMP	INTAKE FILTER	REGULATOR W/ GAUGE
RELIEF VALVE	BALL VALVE	TEMPERTURE SWITCH
CHECK VALVE	UNION	PRESSURE SWITCH/TRANSDUCER
FLEX HOSE	GAUGE	FILTER/SEPERATOR
AIR LINE	SHUTTLE VALVE	ELECTRIC AUTO DRAIN
CONDENSATE LINE		

SYMBOL LEGEND		DRAWINGS TO CONFORM TO CURRENT REVISION OF THE FOLLOWING ANSI STANDARDS: Y14.3 MULTI AND SECTIONAL VIEW DWGS Y14.5 DIMENSIONING AND TOLERANCING
TOLERANCES, UNLESS OTHERWISE SPECIFIED: 0.XX ± .05; 0.XXX ± .005; ∠ ± 1	SOLID EDGE DRAWING	DO NOT SCALE DRAWING FOR DIMENSIONS
	INCH [mm]	SHEET 2 OF 2 / SCALE 1:1

CONFIDENTIAL DISCLOSURE
This drawing is the property of POWEREX INC. of MARMON SPECIALTY PRODUCTS and is subject to return on demand. Its contents are confidential and must not be copied or submitted to outside parties for use or examination.

AUTHOR	REVISION DATE	APPROVALS ON FILE IN PLM
rkrishnaprasad	11/28/24	

ITEM ID: 747824
MATERIAL: N/A
DESCRIPTION: 5HP/3P SCROLL TANKMOUNT SIMPLEX 30GH ED

POWEREX™
150 PRODUCTION DRIVE, HARRISON OH 45030
(888) 769-7979

DRAWING NUMBER: STS0501x2 | REVISION: C | SIZE: D