REV	REVISION	DATE	ECN	NAME	CHKD
B-1	RELEASE TO PRODUCTION	11/02/09	22126	CHR	DMS
I-1	CHANGED GND TO BE 14 AWG	4/16/25	PXEC0668	MJV	JRD
J-1	ADDED SIDE VIEW OF PANEL TO LAYOUT	5/30/2025	PXEC0668	JA	GR
K-1	UPDATING TERMINAL BLOCKS	9/24/25	PXEC0718	MJV	JA

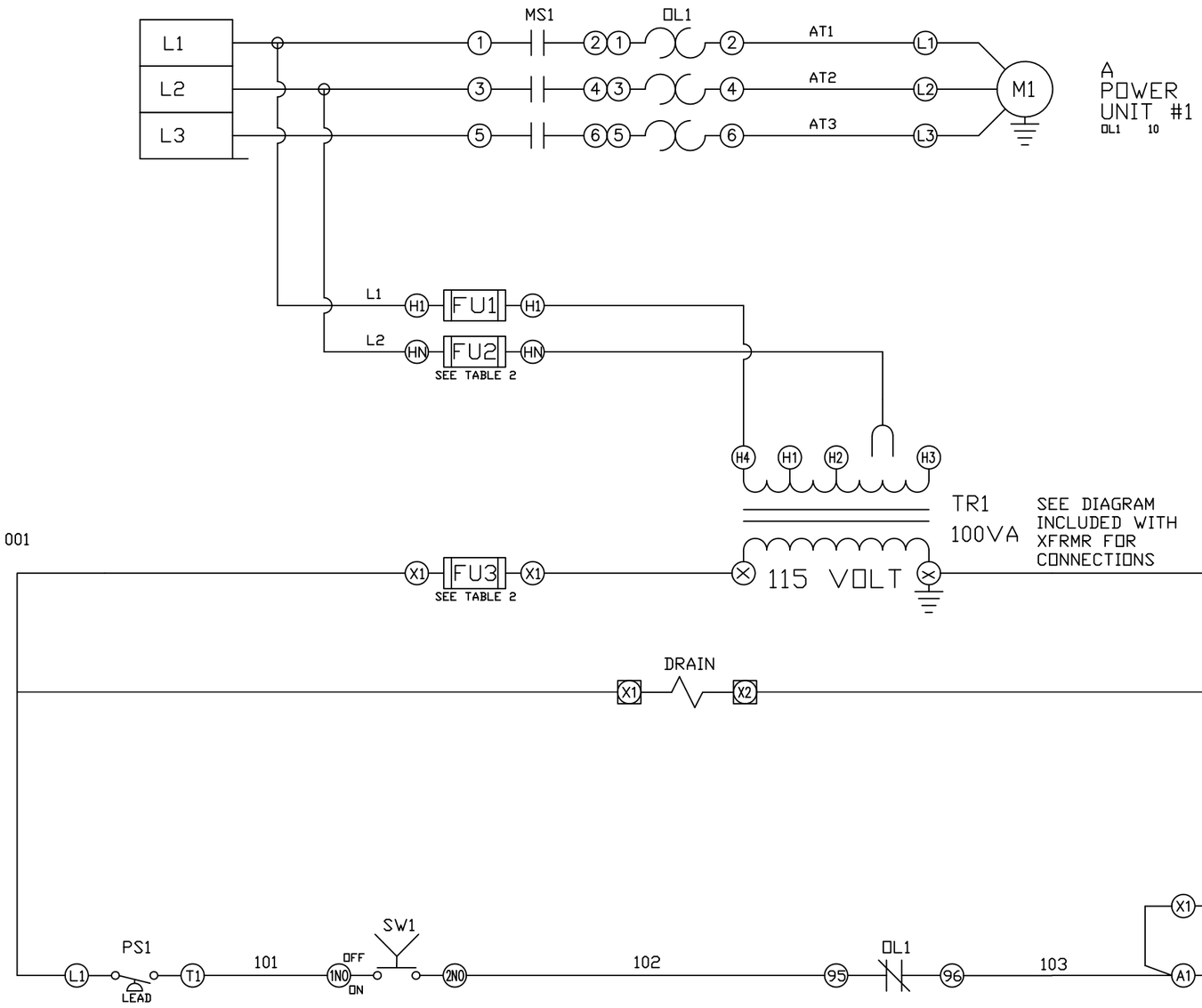

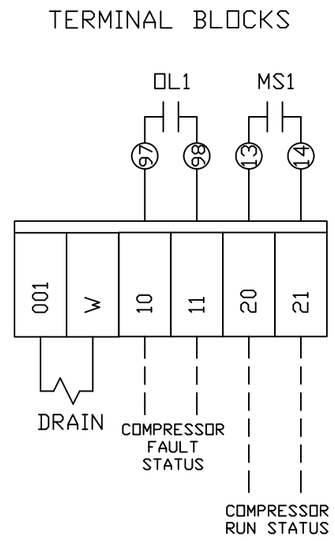

WIRE TYPE TABLE			
VOLTAGE	WIRE NUMBERS	GAUGE	COLOR
120VAC	001-599	16-18AWG	RED/BLK
0VAC	W	16-18AWG	WHT/BLK
24VDC	600-999	16-18AWG	PURPLE
0VDC	701	16-18AWG	PURPLE
GND	-	14 AWG	GREEN
CUSTOMER SUPPLY	01-99	16-18AWG	YELLOW

OPTIONAL:

TABLE 2

CONTROL TRANSFORMERS - 100VA

	FUSE TYPE	208 VOLT	230 VOLT	380 VOLT	460 VOLT	575 VOLT
FU1,2	FNQR	2A	2A	1A	1A	0.8A
FU3	FNM	1.25A	1.25A	1.25A	1.25A	1.25A

POWEREX

150 PRODUCTION DRIVE HARRISON, OHIO 45030
PHONE: (888)-769-7979 FAX: (513) 367-3125

CONFIDENTIAL DISCLOSURE:
This drawing is the property of POWEREX, INC. of the SCOTT FETZER COMPANY and subject to return on demand. Its contents are confidential and must not be copied or submitted to outside parties for use or examination.

DRAWN BY	CHECKED BY	ENGINEERING APPROVAL
CHR	DMS	DMS
11/02/09	11/02/09	11/02/09

PANEL TYPE

SCROLL SIMPLEX INDUSTRIAL

DWG. TYPE WIRING 3PH

DWG. NO.

PSI-100

SHEET W-1

SIZE B

PSI-100 H-1

REV	REVISION	DATE	ECN	NAME	CHKD
B-1	RELEASE TO PRODUCTION	11/02/09	22126	CHR	DMS
I-1	CHANGED GND TO BE 14 AWG	4/16/25	PXEC0668	MJV	JRD
J-1	ADDED SIDE VIEW OF PANEL TO LAYOUT	5/30/25	PXEC0668	JA	GR
K-1	UPDATING TERMINAL BLOCKS	9/24/25	PXEC0718	MJV	JA

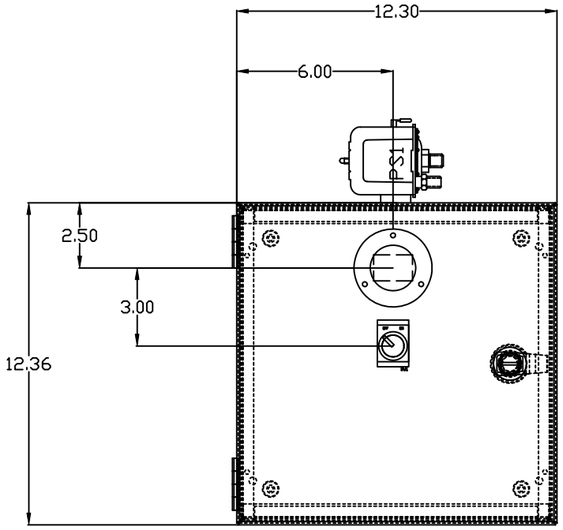

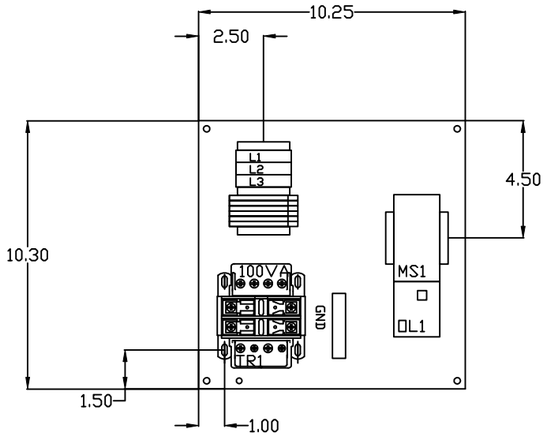

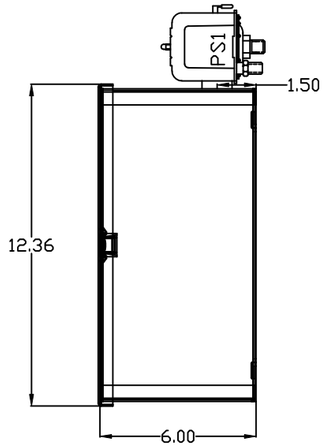

OPTIONAL:

INTENDED ROUTING:

OPTION A

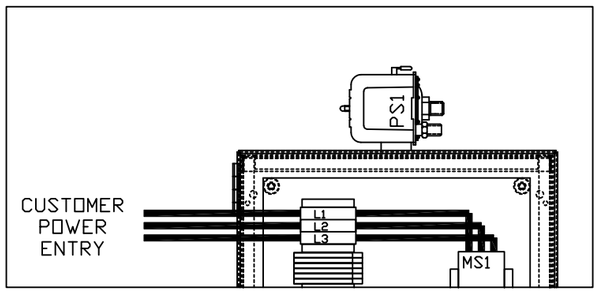

OPTION B

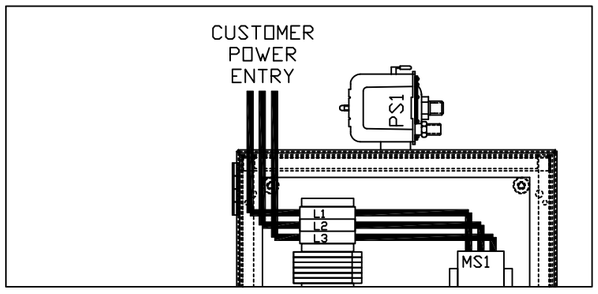

POWEREX

150 PRODUCTION DRIVE HARRISON, OHIO 45030
PHONE: (888)-769-7979 FAX: (513) 367-3125

CONFIDENTIAL DISCLOSURE:
This drawing is the property of POWEREX, INC. of the SCOTT FETZER COMPANY and subject to return on demand. Its contents are confidential and must not be copied or submitted to outside parties for use or examination.

DRAWN BY	CHECKED BY	ENGINEERING APPROVAL
CHR	DMS	DMS
11/02/09	11/02/09	11/02/09

PANEL TYPE

SCROLL SIMPLEX INDUSTRIAL

DWG. TYPE LAYOUT

DWG. NO.

PSI-100

SHEET LA-1

SIZE B

REV	REVISION	DATE	ECN	NAME	CHKD
B-1	RELEASE TO PRODUCTION	11/02/09	22126	CHR	DMS
I-1	CHANGED GND TO BE 14 AWG	4/16/25	PXEC0668	MJV	JRD
J-1	ADDED SIDE VIEW OF PANEL TO LAYOUT	5/30/25	PXEC0668	JA	GR
K-1	UPDATING TERMINAL BLOCKS	9/24/25	PXEC0718	MJV	JA

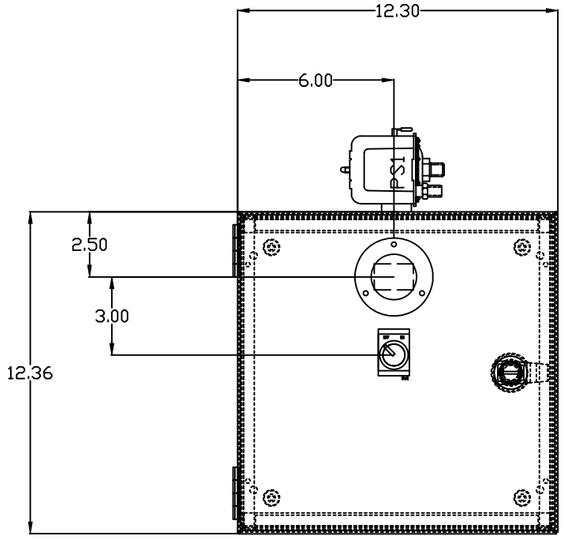

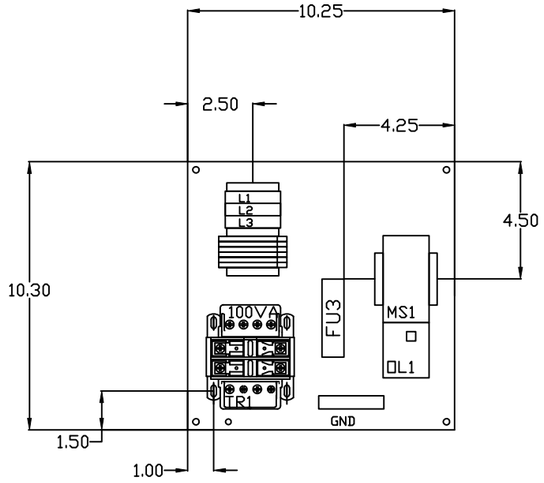

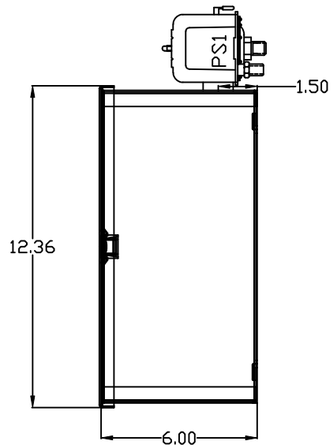

OPTIONAL:

INTENDED ROUTING:

OPTION A

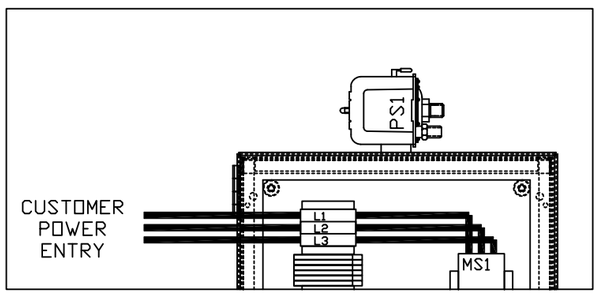

OPTION B

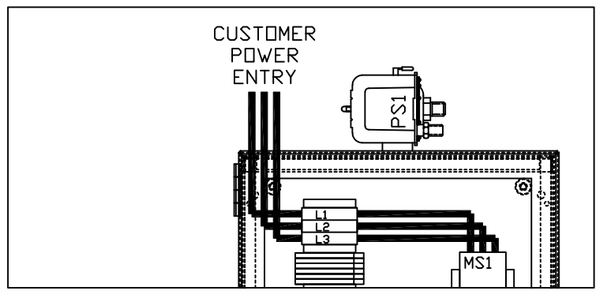

POWEREX

150 PRODUCTION DRIVE HARRISON, OHIO 45030
PHONE: (888)-769-7979 FAX: (513) 367-3125

CONFIDENTIAL DISCLOSURE:
This drawing is the property of POWEREX, INC. of the SCOTT FETZER COMPANY and subject to return on demand. Its contents are confidential and must not be copied or submitted to outside parties for use or examination.

DRAWN BY	CHECKED BY	ENGINEERING APPROVAL
CHR	DMS	DMS
11/02/09	11/02/09	11/02/09

PANEL TYPE
SCROLL SIMPLEX INDUSTRIAL

DWG. TYPE LAYOUT

DWG. NO.
PSI-100

SHEET LB-1

SIZE B

REV	REVISION	DATE	ECN	NAME	CHKD
B-1	RELEASE TO PRODUCTION	11/02/09	22126	CHR	DMS
I-1	CHANGED GND TO BE 14 AWG	4/16/25	PXEC0668	MJV	JRD
J-1	ADDED SIDE VIEW OF PANEL TO LAYOUT	5/30/25	PXEC0668	JA	GR
K-1	UPDATING TERMINAL BLOCKS	9/24/25	PXEC0718	MJV	JA

TABLE 1

PANEL DATA 3ø
100VA CONTROL CIRCUIT

(A) LOAD SPECIFICATIONS					(B) BRANCH CIRCUIT PROTECTION – PROVIDED BY INSTALLER		
PANEL PART NUMBER	MOTOR SIZE EACH	(A) POWER (V/HZ)	(A) MOTOR LOAD EACH (FLA)	PANEL LOAD TOTAL (FLA)	NONTIME DELAY FUSE	TIME-DELAY FUSE	INVERSE-TIME CIRCUIT BREAKER
PSI10032XX	3	208V/60HZ	8.8	9.3	30A	20A	25A
PSI10052XX	5	208V/60HZ	14.6	15.1	45A	30A	40A
PSI10072XX	7.5	208V/60HZ	19.2	19.7	60A	35A	50A
PSI100A2XX	10	208V/60HZ	26.5	27.0	80A	50A	70A
PSI10033XX	3	230V/60HZ	7.7	8.1	25A	15A	20A
PSI10053XX	5	230V/60HZ	12.7	13.1	40A	25A	35A
PSI10073XX	7.5	230V/60HZ	17.9	18.3	60A	35A	50A
PSI100A3XX	10	230V/60HZ	24.0	24.4	80A	45A	70A
PSI10034XX	3	460V/60HZ	3.9	4.1	15A	10A	15A
PSI10054XX	5	460V/60HZ	6.3	6.5	20A	15A	20A
PSI10074XX	7.5	460V/60HZ	9.0	9.2	30A	20A	25A
PSI100A4XX	10	460V/60HZ	12.0	12.2	40A	25A	35A
PSI10038XX	3	380V/50HZ	4.6	4.9	15A	10A	15A
PSI10058XX	5	380V/50HZ	7.7	8.0	25A	15A	20A
PSI10078XX	7.5	380V/50HZ	8.02	8.3	25A	15A	25A
PSI100A8XX	10	380V/50HZ	14.5	14.8	45A	30A	40A
PSI10037XX	3	575V/60HZ	3.1	3.3	10A	10A	15A
PSI10057XX	5	575V/60HZ	5.1	5.3	20A	10A	15A
PSI10077XX	7.5	575V/60HZ	7.2	7.4	25A	15A	20A
PSI100A7XX	10	575V/60HZ	9.9	10.1	30A	20A	25A

NOTE– ADJUST OVERCURRENT PROTECTION DEVICE NOT TO EXCEED 115% OF MOTOR NAMEPLATE FLA VALUE

NOTE– FOR STANDARD PRESSURE SYSTEMS, USE PSI100XXAJ PART#, FOR HIGH PRESSURE SYSTEMS, USE PSI100XXHP PART#

380V SYSTEMS USE LAYOUT B

WIRE TYPE TABLE			
VOLTAGE	WIRE NUMBERS	GAUGE	COLOR
120VAC	001-599	16-18AWG	RED/BLK
0VAC	W	16-18AWG	WHT/BLK
24VDC	600-999	16-18AWG	PURPLE
0VDC	701	16-18AWG	PURPLE
GND	-	14 AWG	GREEN
CUSTOMER SUPPLY	01-99	16-18AWG	YELLOW

OPTIONAL:

NOTES:

1. RECOMMENDED TIGHTENING TORQUES FOR WIRE TERMINALS:
   208-460 VOLT POWER 35 POUND INCHES
   115 VOLT POWER, CONTROL
   AND LOW VOLTAGE 15 POUND INCHES
2. PANEL GROUND MUST BE CONNECTED TO EARTH GROUND
3. INSTALLER TO PROVIDE MAIN DISCONNECTING DEVICE WITH SHORT CIRCUIT PROTECTION FOR THIS ELECTRICAL ASSEMBLY. SEE TABLE 1 FOR ELECTRICAL RATINGS AND PROTECTION SIZING REQUIREMENTS.
4. ALL WIRES MUST BE LABELED ON BOTH ENDS
5. TRANSFORMER IS SIZED FOR LOADS SHOWN ON DRAWING ONLY. DO NOT CONNECT ANY OTHER DEVICES

TABLE 2

CONTROL TRANSFORMERS - 100VA

	FUSE TYPE	208 VOLT	230 VOLT	380 VOLT	460 VOLT	575 VOLT
FU1,2	FNQR	2A	2A	1A	1A	0.8A
FU3	FNM	1.25A	1.25A	1.25A	1.25A	1.25A

POWEREX
150 PRODUCTION DRIVE HARRISON, OHIO 45030
PHONE: (888)-769-7979 FAX: (513) 367-3125

CONFIDENTIAL DISCLOSURE:
This drawing is the property of POWEREX, INC. of the SCOTT FETZER COMPANY and subject to return on demand. Its contents are confidential and must not be copied or submitted to outside parties for use or examination.

DRAWN BY	CHECKED BY	ENGINEERING APPROVAL
CHR	DMS	DMS
11/02/09	11/02/09	11/02/09

PANEL TYPE
SCROLL SIMPLEX INDUSTRIAL

DWG. TYPE DATA 3PH

DWG. NO.
PSI-100

SHEET D-1

SIZE B