STS0754x2

7.5HP SCROLL TANKMOUNT SIMPLEX 120GH HSCV

REVISION NOTES	
DESCRIPTION	ECN
UPDATED BASE MOUNT ASSEMBLY IN MODEL	PXEC0731

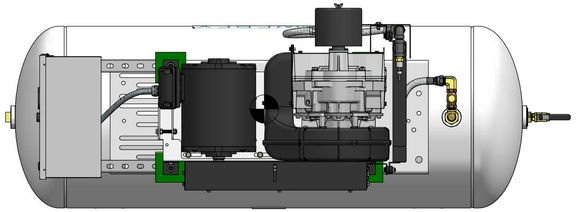

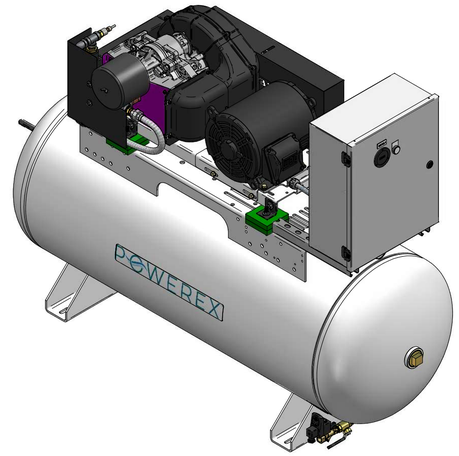

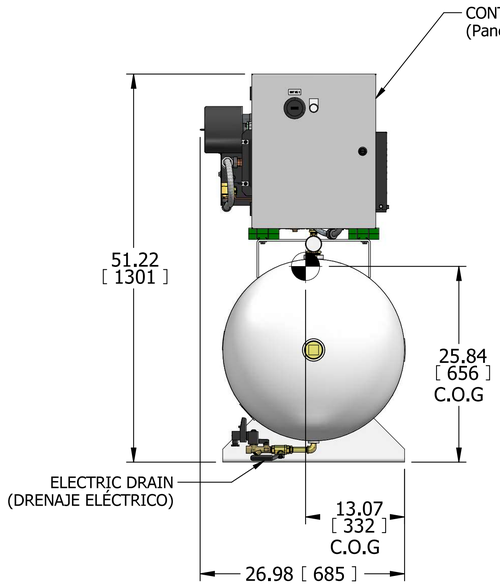

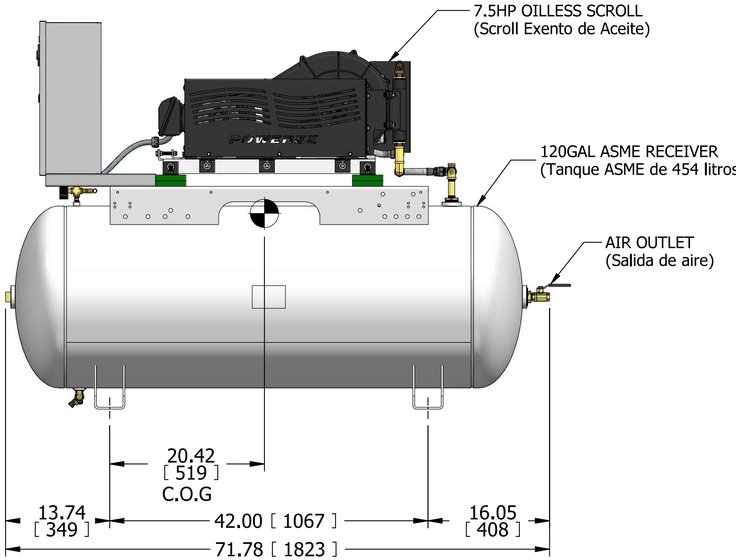

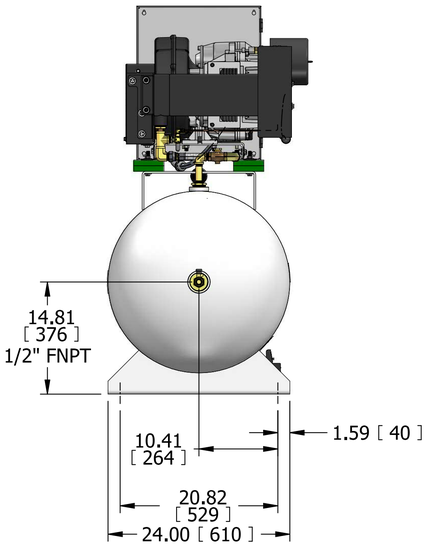

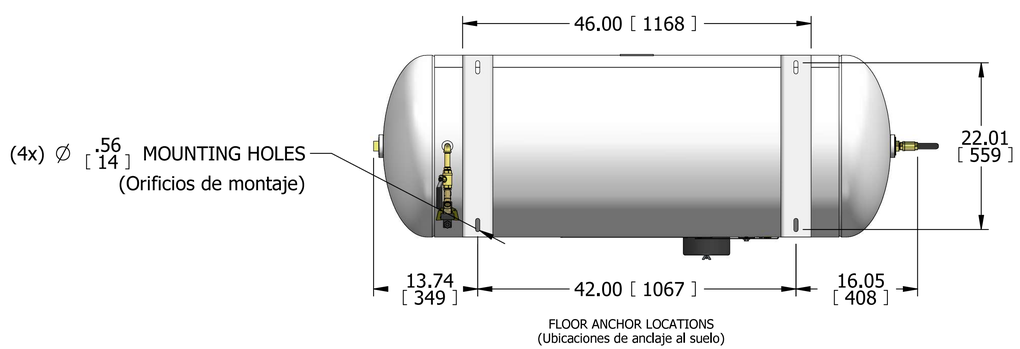

**NOTES:
1. APPROXIMATE WEIGHT: 675 LBS
2. A MINIMUM OF 24" CLEARANCE IS RECOMMENDED AROUND THE ENTIRE UNIT. CLEARANCE FOR CONTROL PANEL SHALL BE IN ACCORDANCE WITH OSHA/NEC REQUIERMENTS.
1. PESO APROXIMADO: 306 in kg
2. RECOMENDAMOS QUE EL ESPACIO LIBRE ALREDEDOR DEL SISTEMA DEBE SER COMO MINIMO 24" (600 mm). EL ESPACIO LIBRE PARA EL TABLERO DE CONTROL DEBERÁ ESTAR DE ACUERDO CON LOS REQUERIMIENTOS DE SEGURIDAD DE LA OSHA/NEC.

SYMBOL LEGEND		DRAWINGS TO CONFORM TO CURRENT REVISION OF THE FOLLOWING ANSI STANDARDS: Y14.3 MULTI AND SECTIONAL VIEW DWGS Y14.5 DIMENSIONING AND TOLERANCING
TOLERANCES, UNLESS OTHERWISE SPECIFIED: 0.XX ± .05; 0.XXX ± .005; ∠ ± 1	SOLID EDGE DRAWING	DO NOT SCALE DRAWING FOR DIMENSIONS
	INCH [mm]	SHEET 1 OF 2 / SCALE 1:8

CONFIDENTIAL DISCLOSURE
This drawing is the property of POWEREX INC. of HARMON HOLDINGS, INC., and is subject to return on demand. Its contents are confidential and must not be copied or submitted to outside parties for use or examination.

AUTHOR	REVISION DATE	APPROVALS ON FILE IN PLM
Seaver,Greg	07/23/26	

ITEM ID: 762775
MATERIAL: N/A
DESCRIPTION: 7.5HP SCROLL TANKMOUNT SIMPLEX 120GH HSCV

POWEREX®
150 PRODUCTION DRIVE, HARRISON OH 45030
(888) 769-7979

DRAWING NUMBER	REVISION	SIZE
STS0754x2	C	D

STS0754x2

7.5HP SCROLL TANKMOUNT SIMPLEX 120GH HSCV

REVISION NOTES	
DESCRIPTION	ECN
UPDATED BASE MOUNT ASSEMBLY IN MODEL	PXEC0731

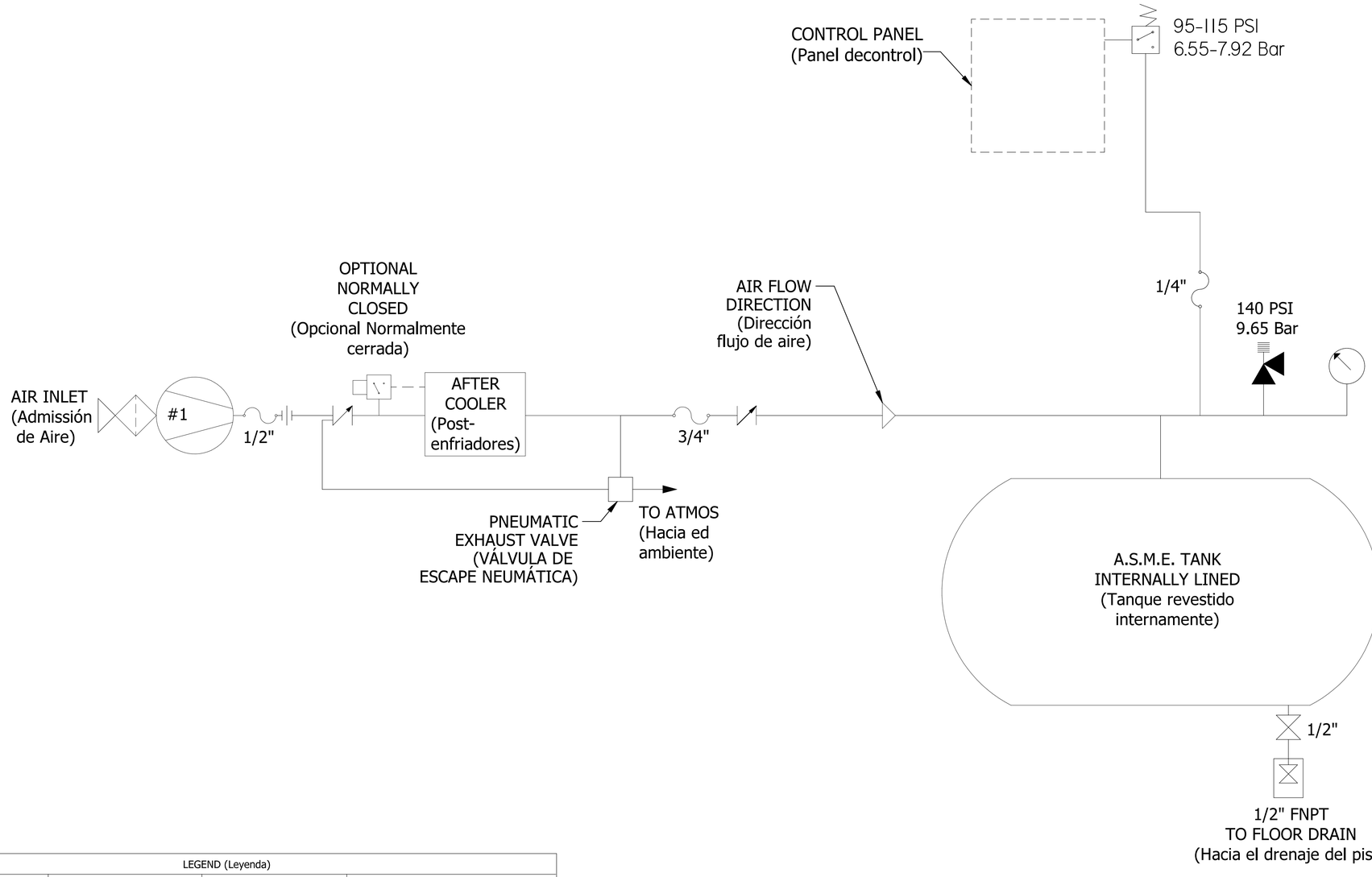

LEGEND (Leyenda)			
COMPRESSOR PUMP (Compresor de Aire)	AIR LINE (Tubería de Aire)	BALL VALVE (Válvula bola)	REGULATOR W/ GAUGE (Regulador con Manómetro)
INTAKE FILTER (Filtro admisión)	CONDENSATE LINE (Línea de condensado)	RELIEF VALVE (Válvula de seguridad)	TEMPERTURE SWITCH (Interruptor temperatura)
FILTER/SEPERATOR (Filtro/Separador)	FLEX HOSE (Manguera flexible)	CHECK VALVE (Válvula Cheque)	PRESSURE SWITCH/TRANSDUCER (Interruptor/Transductor presión)
GAUGE (Manómetro)	UNION (Unión)	DEMAND VALVE (Válvula de demanda)	ELECTRIC AUTO DRAIN (Electroválvula de Drenaje)

SYMBOL LEGEND

DRAWINGS TO CONFORM TO CURRENT REVISION OF THE FOLLOWING ANSI STANDARDS:
Y14.3 MULTI AND SECTIONAL VIEW DWGS
Y14.5 DIMENSIONING AND TOLERANCING

TOLERANCES, UNLESS OTHERWISE SPECIFIED
0.XX ± .05
0.XXX ± .005
∠ ± 1

SOLID EDGE DRAWING

DO NOT SCALE DRAWING FOR DIMENSIONS

INCH [mm]

SHEET 2 OF 2 | SCALE 1:1

CONFIDENTIAL DISCLOSURE
This drawing is the property of POWEREX INC. of MARMON HOLDINGS, INC., and is subject to return on demand. Its contents are confidential and must not be copied or submitted to outside parties for use or examination.

AUTHOR	REVISION DATE	APPROVALS ON FILE IN PLM
Seaver,Greg	07/23/26	

ITEM ID: 762775
MATERIAL: N/A
DESCRIPTION: 7.5HP SCROLL TANKMOUNT SIMPLEX 120GH HSCV

POWEREX®
150 PRODUCTION DRIVE, HARRISON OH 45030
(888) 769-7979

DRAWING NUMBER	REVISION	SIZE
STS0754x2	C	D