STS0756x2

7.5HP SCROLL TANKMOUNT SIMPLEX 240GH

REVISION NOTES	
DESCRIPTION	ECN
UPDATING OPTIONAL TEMP SWITCH INFO	PXEC0668

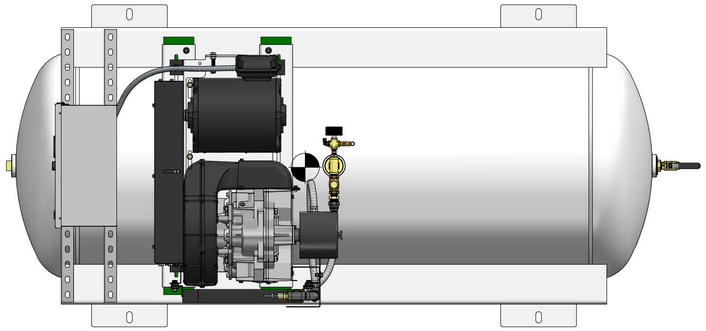

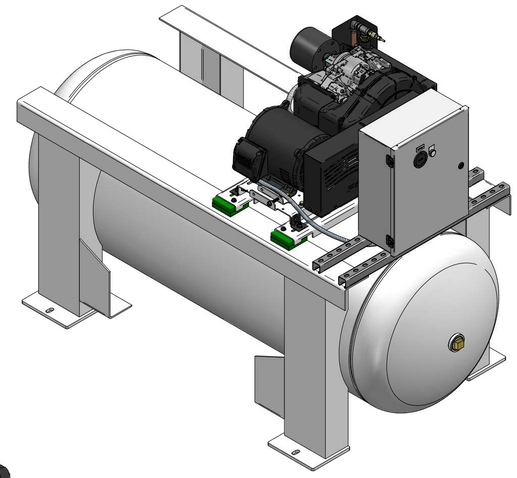

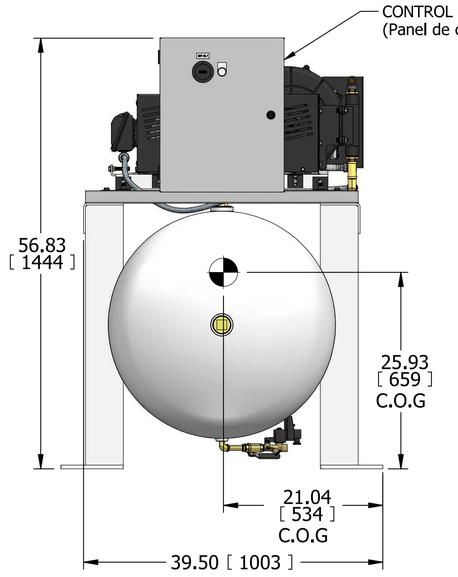

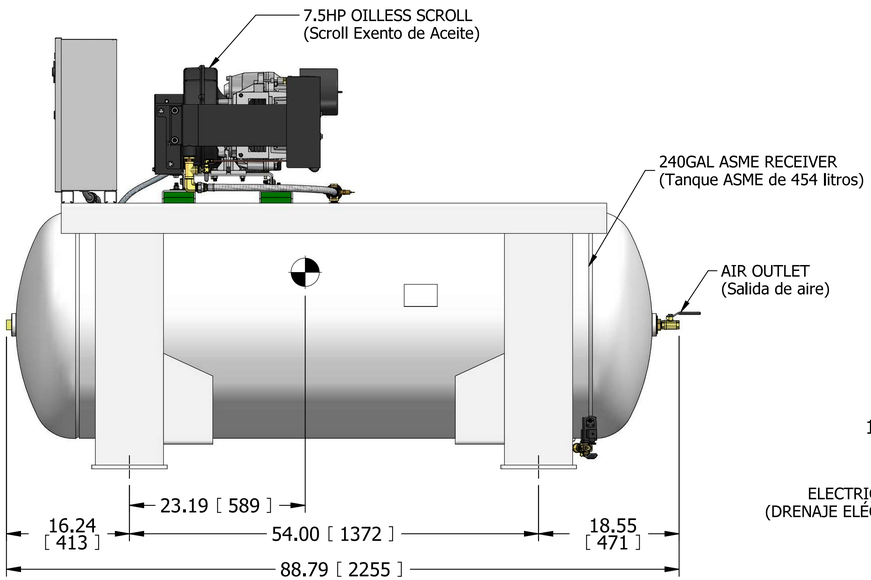

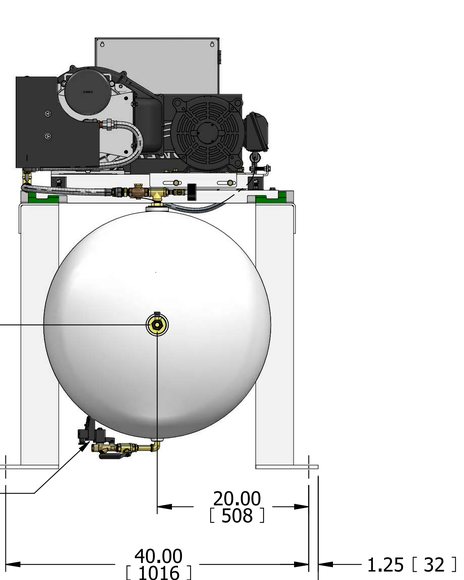

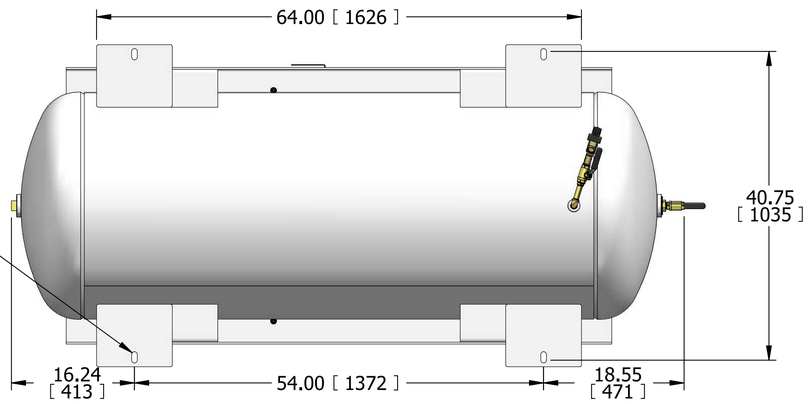

FLOOR ANCHOR LOCATIONS
(Ubicaciones de anclaje al suelo)

NOTE:
1. APPROXIMATE WEIGHT: 1163 lb (527 kg)
2. A MINIMUM OF 24" CLEARANCE IS RECOMMENDED AROUND THE ENTIRE UNIT. CLEARANCE FOR CONTROL PANEL SHALL BE IN ACCORDANCE WITH OSHA/NEC REQUIREMENTS

SYMBOL LEGEND		DRAWINGS TO CONFORM TO CURRENT REVISION OF THE FOLLOWING ANSI STANDARDS: Y14.3 MULTI AND SECTIONAL VIEW DWGS Y14.5 DIMENSIONING AND TOLERANCING
TOLERANCES, UNLESS OTHERWISE SPECIFIED: 0.XX ± .05; 0.XXX ± .005; ∠ ± 1	SOLID EDGE DRAWING; INCH [mm]	DO NOT SCALE DRAWING FOR DIMENSIONS; SHEET 1 OF 2; SCALE 1:8
CONFIDENTIAL DISCLOSURE This drawing is the property of POWEREX INC. of MARMON HOLDINGS, INC., and is subject to return on demand. Its contents are confidential and must not be copied or submitted to outside parties for use or examination.	AUTHOR: Heitfeld,Mark A	REVISION DATE: 11/20/25; APPROVALS ON FILE IN PLM
ITEM ID: 762840; MATERIAL: N/A	POWEREX® 150 PRODUCTION DRIVE, HARRISON OH 45030 (888) 769-7979	
DESCRIPTION: 7.5HP SCROLL TANKMOUNT SIMPLEX 240GH	DRAWING NUMBER: STS0756x2	REVISION: B; SIZE: D

STS0756x2

7.5HP SCROLL TANKMOUNT SIMPLEX 240GH

REVISION NOTES	
DESCRIPTION	ECN
UPDATING OPTIONAL TEMP SWITCH INFO	PXEC0668

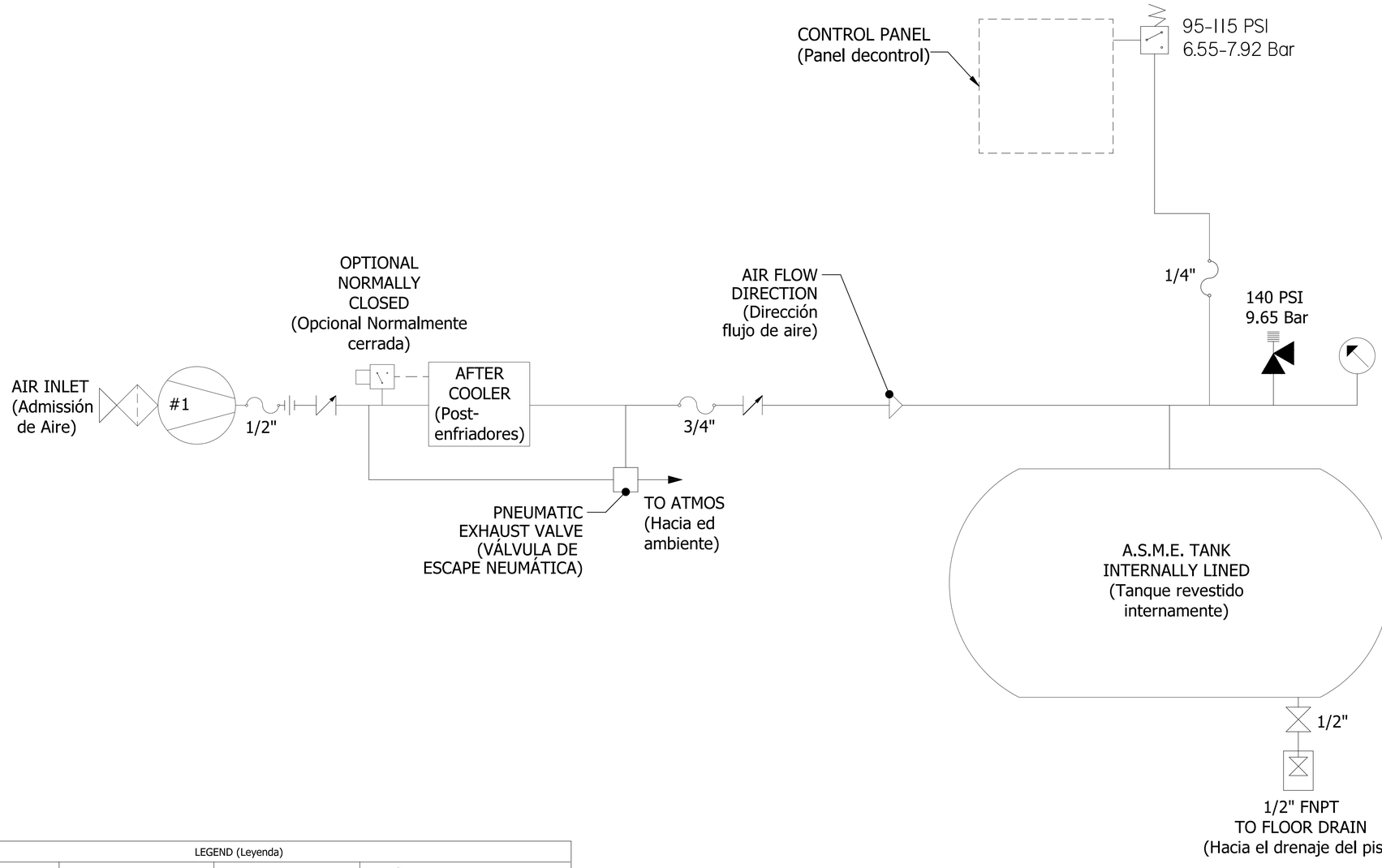

LEGEND (Leyenda)

COMPRESSOR PUMP (Compresor de Aire)	AIR LINE (Tubería de Aire)	BALL VALVE (Válvula bola)	REGULATOR W/ GAUGE (Regulador con Manómetro)
INTAKE FILTER (Filtro admisión)	CONDENSATE LINE (Línea de condensado)	RELIEF VALVE (Válvula de seguridad)	TEMPERTURE SWITCH (Interruptor temperatura)
FILTER/SEPERATOR (Filtro/Separador)	FLEX HOSE (Manguera flexible)	CHECK VALVE (Válvula Cheque)	PRESSURE SWITCH/TRANSDUCER (Interruptor/Transductor presión)
GAUGE (Manómetro)	UNION (Unión)	DEMAND VALVE (Válvula de demanda)	ELECTRIC AUTO DRAIN (Electroválvula de Drenaje)

SYMBOL LEGEND

DRAWINGS TO CONFORM TO CURRENT REVISION OF THE FOLLOWING ANSI STANDARDS:
Y14.3 MULTI AND SECTIONAL VIEW DWGS
Y14.5 DIMENSIONING AND TOLERANCING

TOLERANCES, UNLESS OTHERWISE SPECIFIED
0.XX ± .05
0.XXX ± .005
∠ ± 1

SOLID EDGE DRAWING

DO NOT SCALE DRAWING FOR DIMENSIONS

INCH [mm]

SHEET 2 OF 2

SCALE 1:1

CONFIDENTIAL DISCLOSURE
This drawing is the property of POWEREX INC. of MARMON HOLDINGS, INC., and is subject to return on demand. Its contents are confidential and must not be copied or submitted to outside parties for use or examination.

AUTHOR	REVISION DATE	APPROVALS ON FILE IN PLM
Heitfeld,Mark A	11/20/25	

ITEM ID:
762840

MATERIAL:
N/A

DESCRIPTION
7.5HP SCROLL TANKMOUNT SIMPLEX 240GH

POWEREX®
150 PRODUCTION DRIVE, HARRISON OH 45030
(888) 769-7979

DRAWING NUMBER	REVISION	SIZE
STS0756x2	B	D