STS10B6x2

10HP SCROLL TANKMOUNT SIMPLEX 240GH

REVISION NOTES	
DESCRIPTION	ECN
REVISED OUTLET PLUMBING AND PANEL SIZE	PXEC0318

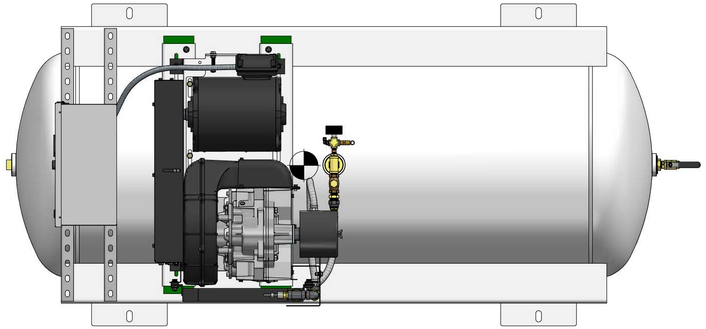

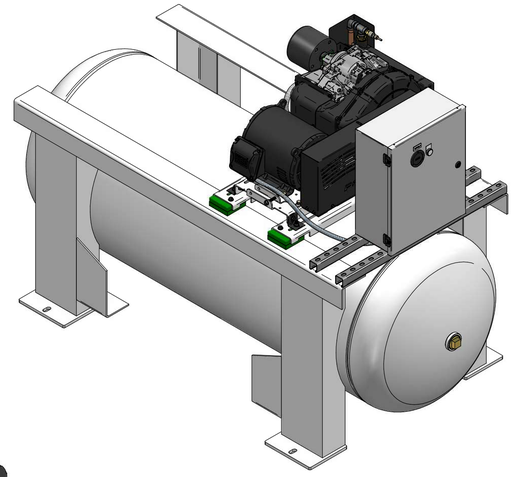

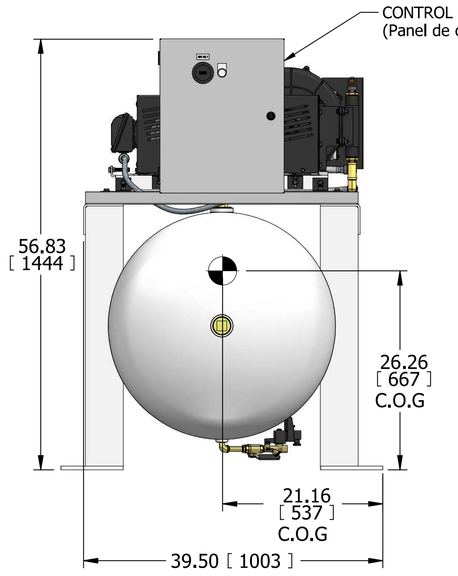

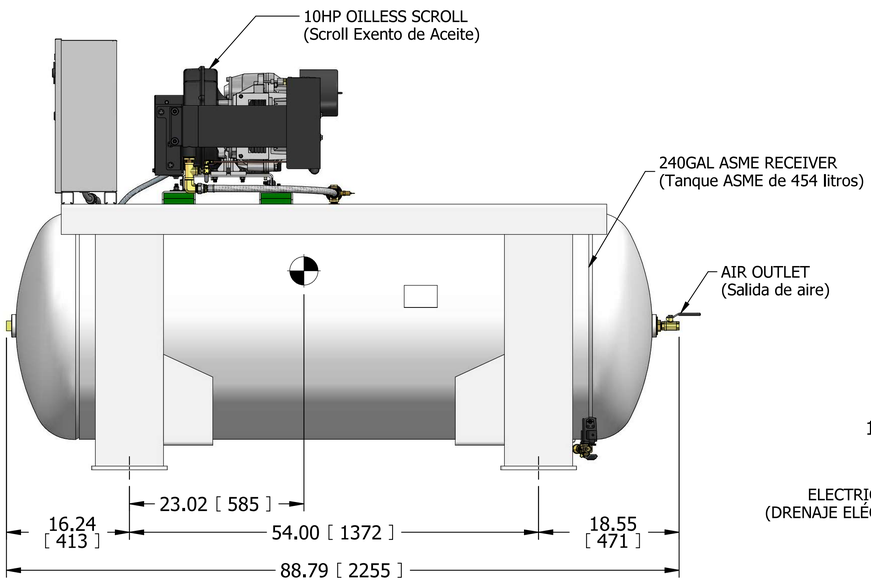

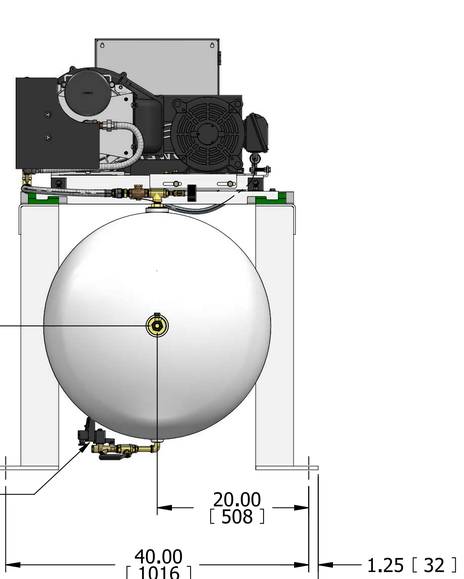

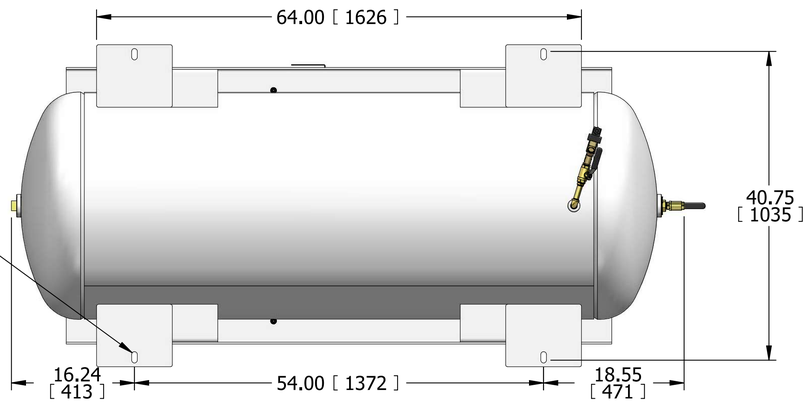

FLOOR ANCHOR LOCATIONS
(Ubicaciones de anclaje al suelo)

NOTE:
1. APPROXIMATE WEIGHT: 1184 lb (537 kg)
2. A MINIMUM OF 24" CLEARANCE IS RECOMMENDED AROUND THE ENTIRE UNIT. CLEARANCE FOR CONTROL PANEL SHALL BE IN ACCORDANCE WITH OSHA/NEC REQUIREMENTS

SYMBOL LEGEND		DRAWINGS TO CONFORM TO CURRENT REVISION OF THE FOLLOWING ANSI STANDARDS: Y14.3 MULTI AND SECTIONAL VIEW DWGS Y14.5 DIMENSIONING AND TOLERANCING
TOLERANCES, UNLESS OTHERWISE SPECIFIED: 0.XX ± .05; 0.XXX ± .005; ∠ ± 1	SOLID EDGE DRAWING	DO NOT SCALE DRAWING FOR DIMENSIONS
	INCH [mm]	SHEET 1 OF 2 — SCALE 1:8

CONFIDENTIAL DISCLOSURE
This drawing is the property of POWEREX INC. of MARMON HOLDINGS, INC., and is subject to return on demand. Its contents are confidential and must not be copied or submitted to outside parties for use or examination.

AUTHOR	REVISION DATE	APPROVALS ON FILE IN PLM
Heitfeld,Mark A	11/20/25	

ITEM ID: 762800
MATERIAL: N/A
DESCRIPTION: 10HP SCROLL TANKMOUNT SIMPLEX 240GH

POWEREX®
150 PRODUCTION DRIVE, HARRISON OH 45030
(888) 769-7979

DRAWING NUMBER	REVISION	SIZE
STS10B6x2	B	D

STS10B6x2

10HP SCROLL TANKMOUNT SIMPLEX 240GH

REVISION NOTES	
DESCRIPTION	ECN
REVISED OUTLET PLUMBING AND PANEL SIZE	PXEC0318

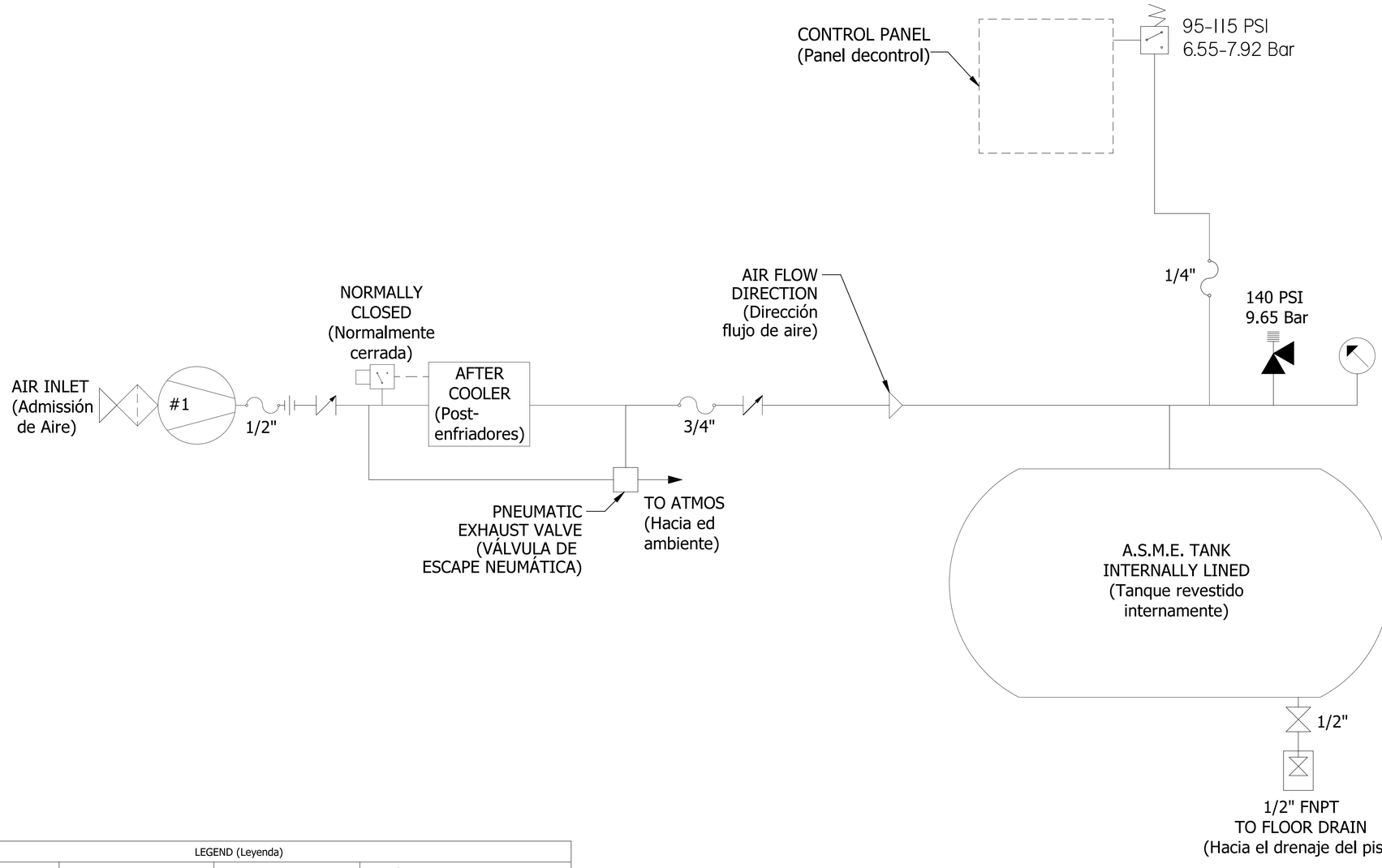

LEGEND (Leyenda)

COMPRESSOR PUMP (Compresor de Aire)	AIR LINE (Tubería de Aire)	BALL VALVE (Válvula bola)	REGULATOR W/ GAUGE (Regulador con Manómetro)
INTAKE FILTER (Filtro admisión)	CONDENSATE LINE (Línea de condensado)	RELIEF VALVE (Válvula de seguridad)	TEMPERTURE SWITCH (Interruptor temperatura)
FILTER/SEPERATOR (Filtro/Separador)	FLEX HOSE (Manguera flexible)	CHECK VALVE (Válvula Cheque)	PRESSURE SWITCH/TRANSDUCER (Interruptor/Transductor presión)
GAUGE (Manómetro)	UNION (Unión)	DEMAND VALVE (Válvula de demanda)	ELECTRIC AUTO DRAIN (Electroválvula de Drenaje)

SYMBOL LEGEND

DRAWINGS TO CONFORM TO CURRENT REVISION OF THE FOLLOWING ANSI STANDARDS:
Y14.3 MULTI AND SECTIONAL VIEW DWGS
Y14.5 DIMENSIONING AND TOLERANCING

TOLERANCES, UNLESS OTHERWISE SPECIFIED
0.XX ± .05
0.XXX ± .005
∠ ± 1

SOLID EDGE DRAWING

DO NOT SCALE DRAWING FOR DIMENSIONS

INCH [mm]

SHEET 2 OF 2

SCALE 1:1

CONFIDENTIAL DISCLOSURE
This drawing is the property of POWEREX INC. of MARMON HOLDINGS, INC., and is subject to return on demand. Its contents are confidential and must not be copied or submitted to outside parties for use or examination.

AUTHOR	REVISION DATE	APPROVALS ON FILE IN PLM
Heitfeld,Mark A	11/20/25	

ITEM ID:
762800

MATERIAL:
N/A

DESCRIPTION
10HP SCROLL TANKMOUNT SIMPLEX 240GH

POWEREX®
150 PRODUCTION DRIVE, HARRISON OH 45030
(888) 769-7979

DRAWING NUMBER
STS10B6x2

REVISION
B

SIZE
D