REV	REVISION	DATE	ECN	NAME	CHKD
B-1	RELEASE TO PRODUCTION	11/02/09	22126	CHR	DMS
I-1	CHANGED GND TO BE 14 AWG	4/16/25	PXEC0668	MJV	JRD
J-1	ADDED SIDE VIEW OF PANEL TO LAYOUT	5/30/2025	PXEC0668	JA	GR
K-1	UPDATING TERMINAL BLOCKS	9/24/25	PXEC0718	MJV	JA

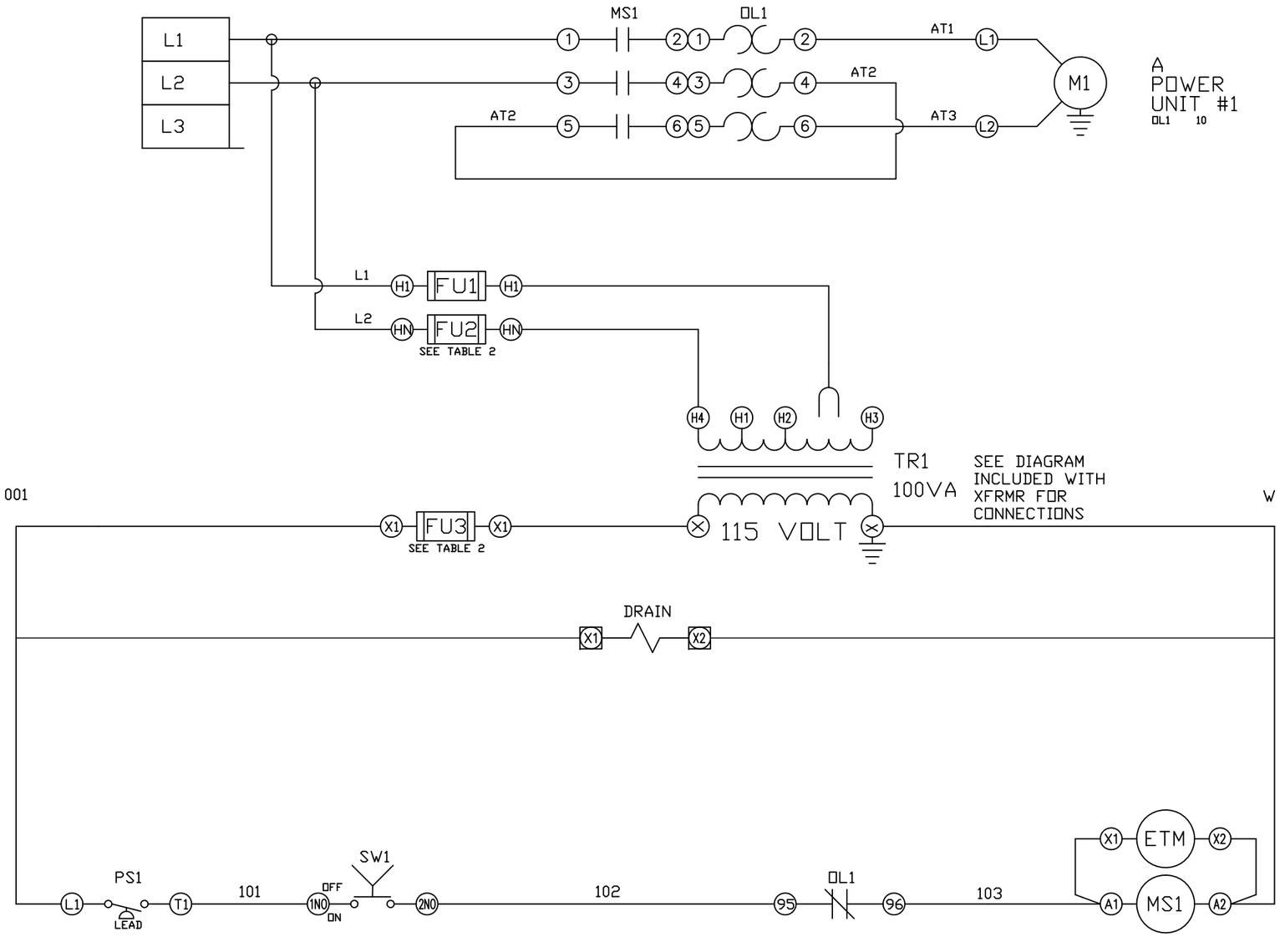

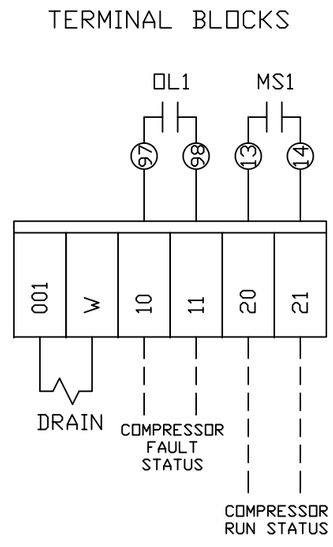

WIRE TYPE TABLE			
VOLTAGE	WIRE NUMBERS	GAUGE	COLOR
120VAC	001-599	16-18AWG	RED/BLK
0VAC	W	16-18AWG	WHT/BLK
24VDC	600-999	16-18AWG	PURPLE
0VDC	701	16-18AWG	PURPLE
GND	-	14 AWG	GREEN
CUSTOMER SUPPLY	01-99	16-18AWG	YELLOW

OPTIONAL:

POWEREX

150 PRODUCTION DRIVE HARRISON, OHIO 45030
PHONE: (888)-769-7979 FAX: (513) 367-3125

CONFIDENTIAL DISCLOSURE:
This drawing is the property of POWEREX, INC. of the SCOTT FETZER COMPANY and subject to return on demand. Its contents are confidential and must not be copied or submitted to outside parties for use or examination.

DRAWN BY	CHECKED BY	ENGINEERING APPROVAL
CHR	DMS	DMS
11/02/09	11/02/09	11/02/09

PANEL TYPE

SCROLL SIMPLEX INDUSTRIAL

DWG. TYPE WIRING 1PH

DWG. NO. PSI-100

SHEET W-1

SIZE B

PSI-100 H-1

TABLE 2

CONTROL TRANSFORMERS - 100VA

	FUSE TYPE	208 VOLT	230 VOLT	380 VOLT	460 VOLT	575 VOLT
FU1,2	FNQR	2A	2A	1A	1A	0.8A
FU3	FNM	1.25A	1.25A	1.25A	1.25A	1.25A

REV	REVISION	DATE	ECN	NAME	CHKD
B-1	RELEASE TO PRODUCTION	6/9/25	22126	MJV	JRD
C-1	CHANGED THE MOTOR AND OVERLOAD RELAY FOR 115V 1PH	6/27/2025	PXEC0668	JA	JRD
K-1	UPDATING TERMINAL BLOCKS	9/24/25	PXEC0718	MJV	JA

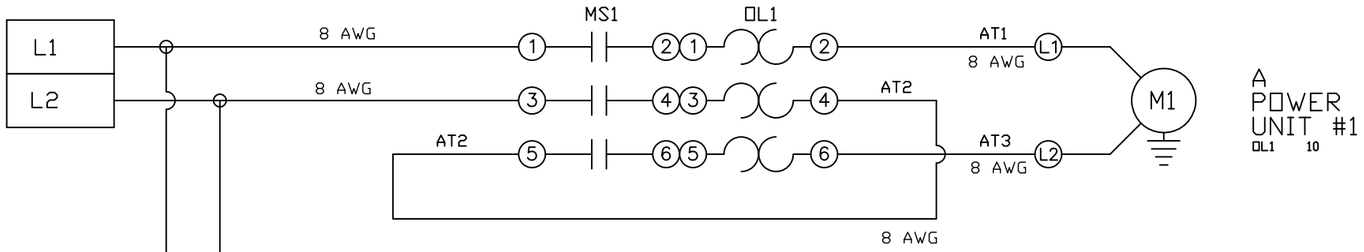

A
POWER
UNIT #1
OL1 10

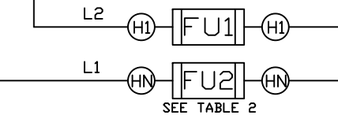

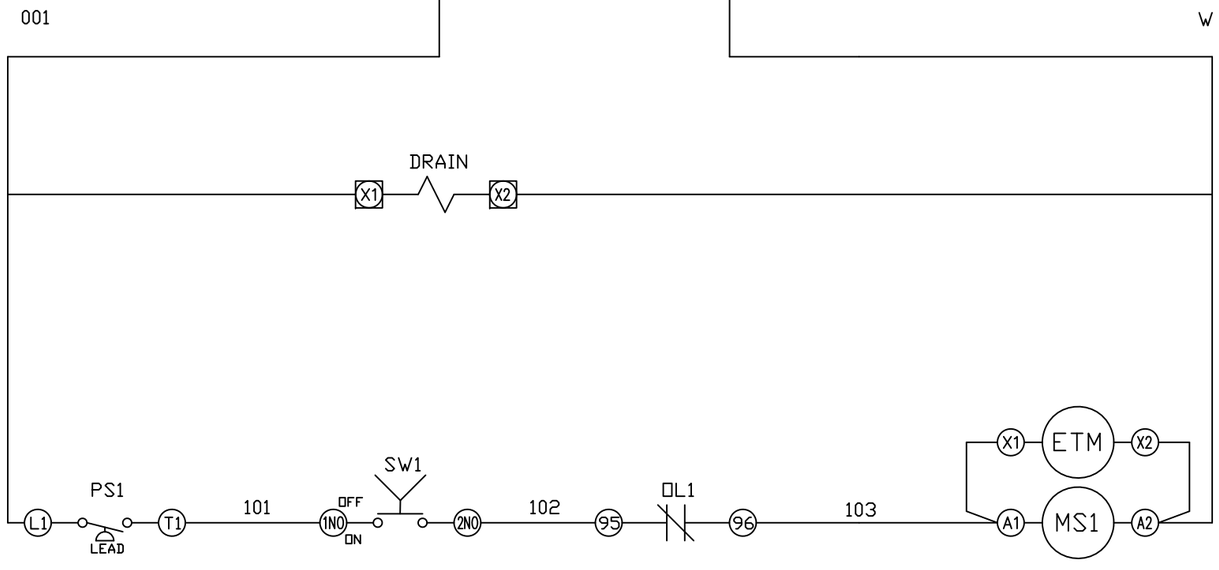

10
CONTROL
UNIT #1
MS1 A

TERMINAL BLOCKS

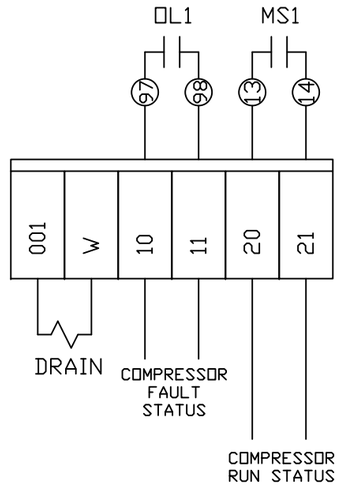

WIRE TYPE TABLE			
VOLTAGE	WIRE NUMBERS	GAUGE	COLOR
120VAC	001-599	16-18AWG	RED/BLK
0VAC	W	16-18AWG	WHT/BLK
24VDC	600-999	16-18AWG	PURPLE
0VDC	701	16-18AWG	PURPLE
GND	-	14 AWG	GREEN
CUSTOMER SUPPLY	01-99	16-18AWG	YELLOW

TABLE 2 115V CONTROL CIRCUIT BRANCH PROTECTION	
FUSE SIZE	1 A
FUSE TYPE	BUSSMAN FNQR

OPTIONAL:

POWEREX

150 PRODUCTION DRIVE HARRISON, OHIO 45030
PHONE: (888)-769-7979 FAX: (513) 367-3125

CONFIDENTIAL DISCLOSURE:
This drawing is the property of POWEREX, INC. of the SCOTT FETZER COMPANY and subject to return on demand. Its contents are confidential and must not be copied or submitted to outside parties for use or examination.

DRAWN BY	CHECKED BY	ENGINEERING APPROVAL
MJV	JRD	JRD
6/9/25	6/9/25	6/9/25

PANEL TYPE
SCROLL SIMPLEX INDUSTRIAL

DWG. TYPE WIRING 115V 1 PH

DWG. NO.
PSI-100

SHEET W-1

SIZE B

REV	REVISION	DATE	ECN	NAME	CHKD
B-1	RELEASE TO PRODUCTION	11/02/09	22126	CHR	DMS
I-1	CHANGED GND TO BE 14 AWG	4/16/25	PXEC0668	MJV	JRD
J-1	ADDED SIDE VIEW OF PANEL TO LAYOUT	5/30/25	PXEC0668	JA	GR
K-1	UPDATING TERMINAL BLOCKS	9/24/25	PXEC0718	MJV	JA

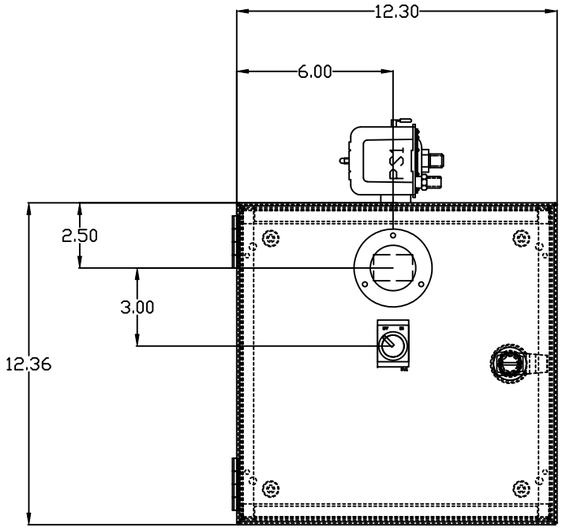

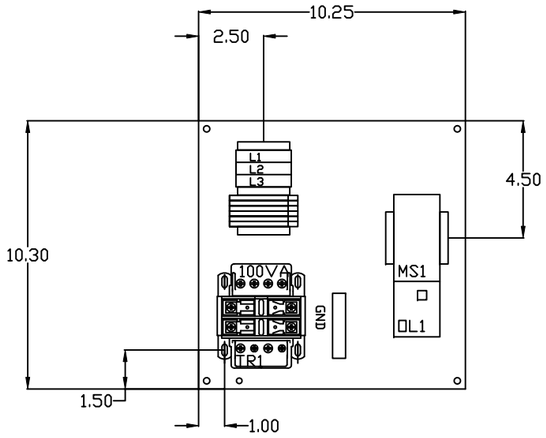

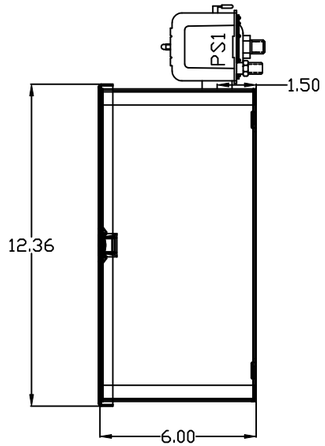

OPTIONAL:

INTENDED ROUTING:

OPTION A

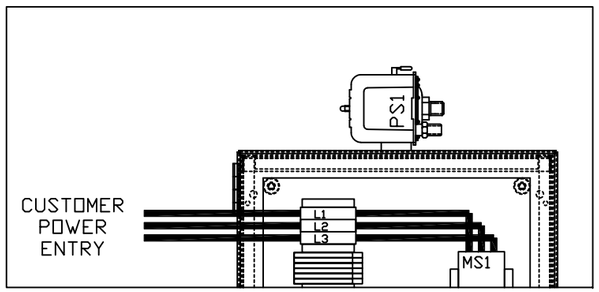

OPTION B

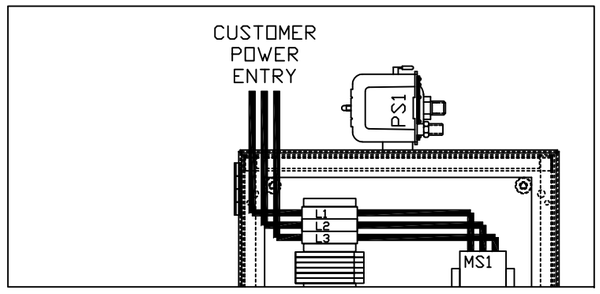

POWEREX™

150 PRODUCTION DRIVE HARRISON, OHIO 45030
PHONE: (888)-769-7979 FAX: (513) 367-3125

CONFIDENTIAL DISCLOSURE:
This drawing is the property of POWEREX, INC. of the SCOTT FETZER COMPANY and subject to return on demand. Its contents are confidential and must not be copied or submitted to outside parties for use or examination.

DRAWN BY	CHECKED BY	ENGINEERING APPROVAL
CHR	DMS	DMS
11/02/09	11/02/09	11/02/09

PANEL TYPE
SCROLL SIMPLEX INDUSTRIAL

DWG. TYPE LAYOUT

DWG. NO.
PSI-100

SHEET LA-1

SIZE B

REV	REVISION	DATE	ECN	NAME	CHKD
B-1	RELEASE TO PRODUCTION	6/10/25	22126	MJV	JRD
C-1	CHANGED THE MOTOR AND OVERLOAD RELAY FOR 115V 1PH	5/30/25	PXEC0668	JA	JRD
K-1	UPDATING TERMINAL BLOCKS	9/24/25	PXEC0718	MJV	JA

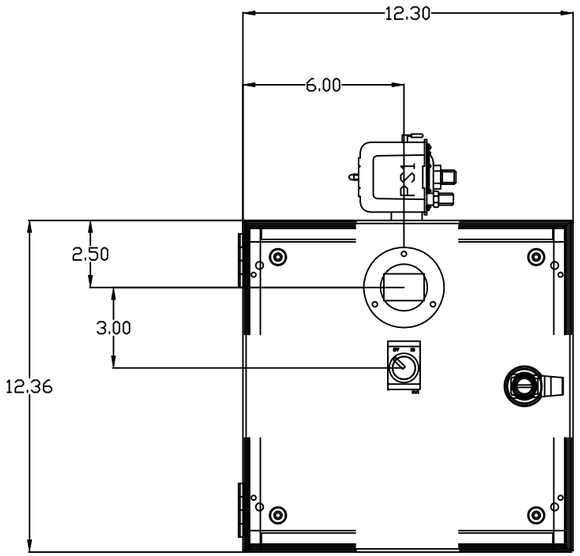

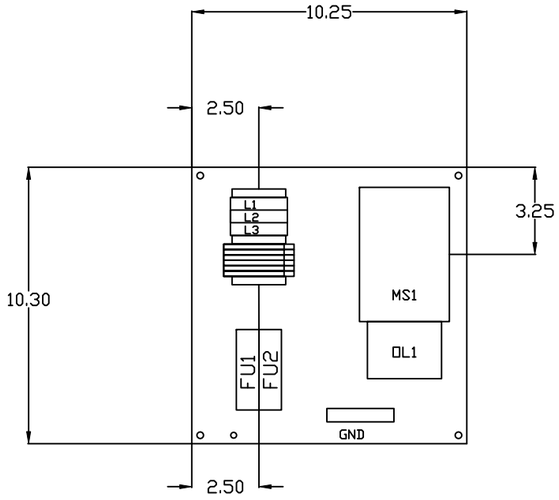

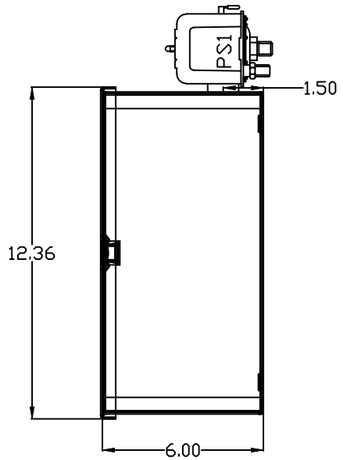

OPTIONAL:

INTENDED ROUTING:

OPTION A

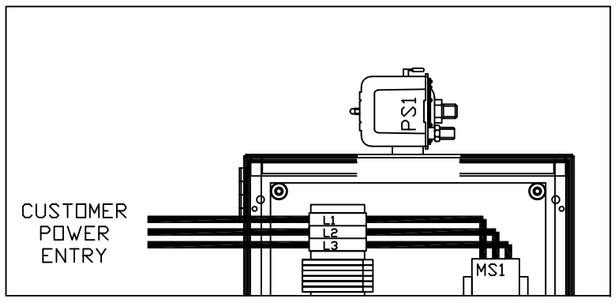

OPTION B

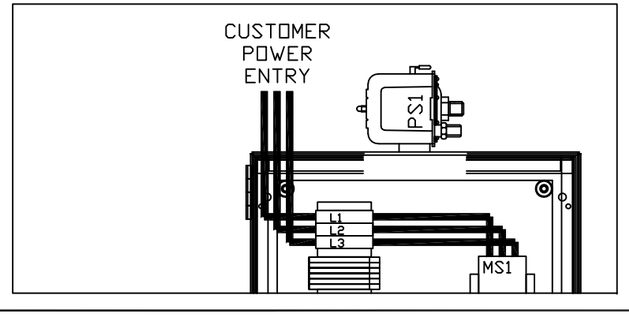

POWEREX

150 PRODUCTION DRIVE HARRISON, OHIO 45030
PHONE: (888)-769-7979 FAX: (513) 367-3125

CONFIDENTIAL DISCLOSURE:
This drawing is the property of POWEREX, INC. of the SCOTT FETZER COMPANY and subject to return on demand. Its contents are confidential and must not be copied or submitted to outside parties for use or examination.

DRAWN BY	CHECKED BY	ENGINEERING APPROVAL
MJV	JRD	JRD
6/10/25	6/10/25	6/10/25

PANEL TYPE

SCROLL SIMPLEX INDUSTRIAL

DWG. TYPE LAYOUT

DWG. NO.

PSI-100

SHEET LC-1

SIZE B

REV	REVISION	DATE	ECN	NAME	CHKD
B-1	RELEASE TO PRODUCTION	11/02/09	22126	CHR	DMS
I-1	CHANGED GND TO BE 14 AWG	4/16/25	PXEC0668	MJV	JRD
J-1	ADDED SIDE VIEW OF PANEL TO LAYOUT	5/30/25	PXEC0668	JA	GR
K-1	UPDATING TERMINAL BLOCKS	9/24/25	PXEC0718	MJV	JA

TABLE 1

PANEL DATA 1ø
100VA CONTROL CIRCUIT

(A) LOAD SPECIFICATIONS					(B) BRANCH CIRCUIT PROTECTION – PROVIDED BY INSTALLER		
PANEL PART NUMBER	MOTOR SIZE EACH	(A) POWER (V/HZ)	(A) MOTOR LOAD EACH (FLA)	PANEL LOAD TOTAL (FLA)	NONTIME DELAY FUSE	TIME-DELAY FUSE	INVERSE-TIME CIRCUIT BREAKER
PSI10035XX	3	208V/60HZ	16.8	17.3	60A	30A	45A
PSI10036XX	3	230V/60HZ	16.0	16.4	50A	30A	45A
PSI10056XX	5	230V/60HZ	23.0	23.4	70A	45A	60A

NOTE– ADJUST OVERCURRENT PROTECTION DEVICE NOT TO EXCEED 115% OF MOTOR NAMEPLATE FLA VALUE

NOTE– FOR STANDARD PRESSURE SYSTEMS, USE PSI100XXAJ PART#, FOR HIGH PRESSURE SYSTEMS, USE PSI100XXHP PART#

TABLE 1

PANEL DATA 1ø 115V

(A) LOAD SPECIFICATIONS					(B) BRANCH CIRCUIT PROTECTION – PROVIDED BY INSTALLER		
PANEL PART NUMBER	MOTOR SIZE EACH	(A) POWER (V/HZ)	(A) MOTOR LOAD EACH (FLA)	PANEL LOAD TOTAL (FLA)	NONTIME DELAY FUSE	TIME-DELAY FUSE	INVERSE-TIME CIRCUIT BREAKER
PSI10021XX	3	115V/60HZ	32	32.0	100A	60A	80A

115V SYSTEMS USE LAYOUT C

* Uses a 3 HP MOTOR so adjust FLA accordingly

NOTE– ADJUST OVERCURRENT PROTECTION DEVICE NOT TO EXCEED 115% OF MOTOR NAMEPLATE FLA VALUE

NOTE– FOR STANDARD PRESSURE SYSTEMS, USE PSI100XXAJ PART#, FOR HIGH PRESSURE SYSTEMS, USE PSI100XXHP PART#

NOTES:

1. RECOMMENDED TIGHTENING TORQUES FOR WIRE TERMINALS:
   208-460 VOLT POWER 35 POUND INCHES
   115 VOLT POWER, CONTROL AND LOW VOLTAGE 15 POUND INCHES
2. PANEL GROUND MUST BE CONNECTED TO EARTH GROUND
3. INSTALLER TO PROVIDE MAIN DISCONNECTING DEVICE WITH SHORT CIRCUIT PROTECTION FOR THIS ELECTRICAL ASSEMBLY. SEE TABLE 1 FOR ELECTRICAL RATINGS AND PROTECTION SIZING REQUIREMENTS.
4. ALL WIRES MUST BE LABELED ON BOTH ENDS
5. TRANSFORMER IS SIZED FOR LOADS SHOWN ON DRAWING ONLY. DO NOT CONNECT ANY OTHER DEVICES

WIRE TYPE TABLE

VOLTAGE	WIRE NUMBERS	GAUGE	COLOR
120VAC	001-599	16-18AWG	RED/BLK
0VAC	W	16-18AWG	WHT/BLK
24VDC	600-999	16-18AWG	PURPLE
0VDC	701	16-18AWG	PURPLE
GND	–	14 AWG	GREEN
CUSTOMER SUPPLY	01-99	16-18AWG	YELLOW

OPTIONAL:

TABLE 2

CONTROL TRANSFORMERS - 100VA

	FUSE TYPE	208 VOLT	230 VOLT	380 VOLT	460 VOLT	575 VOLT
FU1,2	FNQR	2A	2A	1A	1A	0.8A
FU3	FNM	1.25A	1.25A	1.25A	1.25A	1.25A

POWEREX

150 PRODUCTION DRIVE HARRISON, OHIO 45030
PHONE: (888)-769-7979 FAX: (513) 367-3125

CONFIDENTIAL DISCLOSURE:
This drawing is the property of POWEREX, INC. of the SCOTT FETZER COMPANY and subject to return on demand. Its contents are confidential and must not be copied or submitted to outside parties for use or examination.

DRAWN BY	CHECKED BY	ENGINEERING APPROVAL
CHR	DMS	DMS
11/02/09	11/02/09	11/02/09

PANEL TYPE

SCROLL SIMPLEX INDUSTRIAL

DWG. TYPE DATA 1PH

DWG. NO.

PSI-100

SHEET D-1

SIZE B

PSI-100 H-1