STS1302x2

3HP/1P SCROLL TANKMOUNT SIMPLEX 60GH ED

REVISION NOTES	
DESCRIPTION	ECN
INITIAL RELEASE	PXEC0690

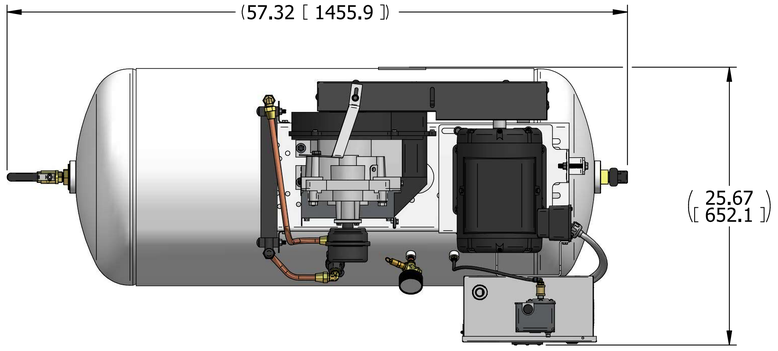

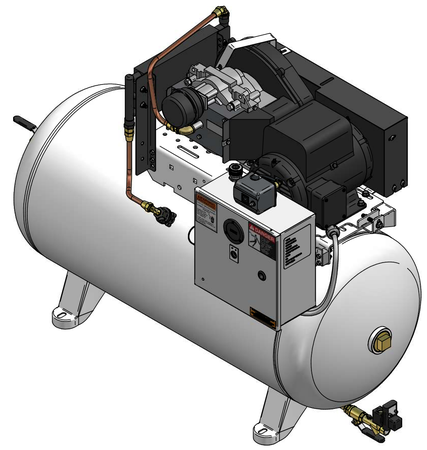

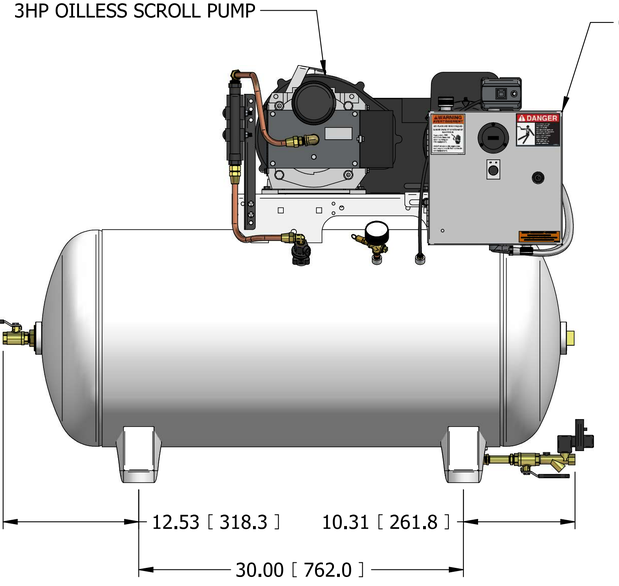

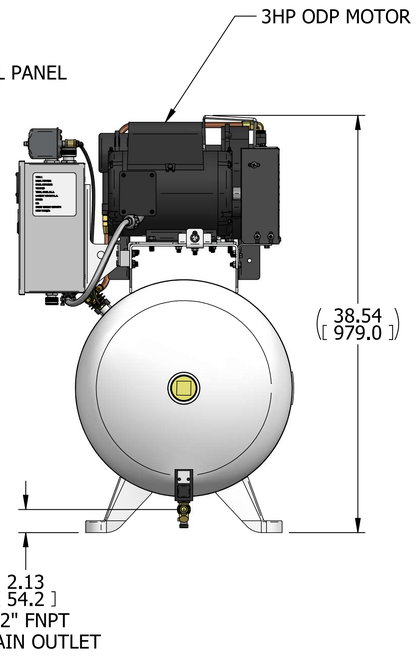

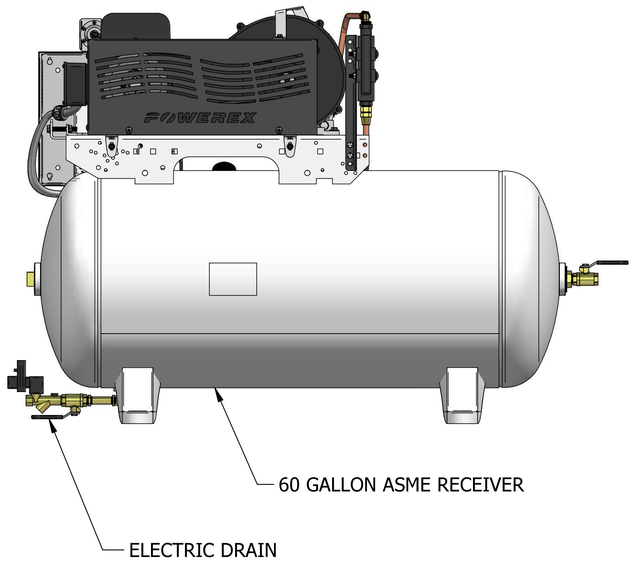

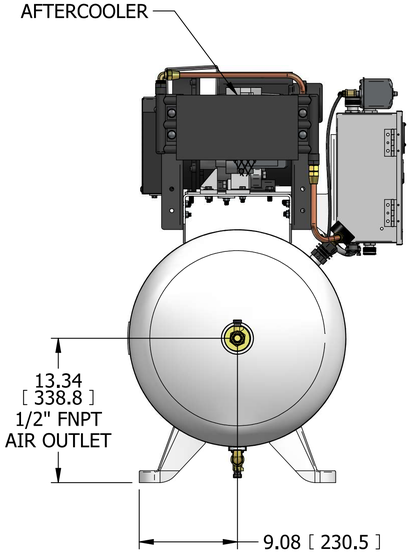

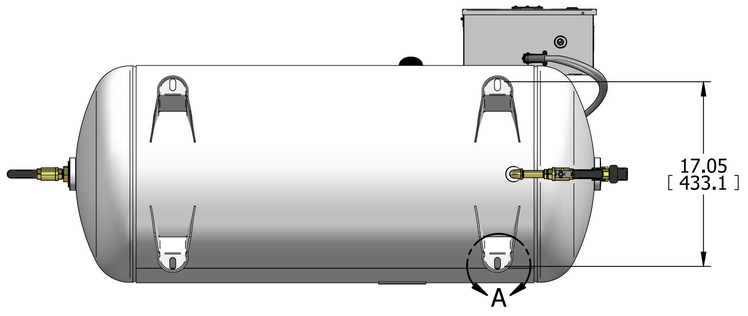

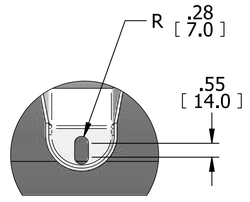

(4X) DETAIL A

NOTES:
1. APPROXIMATE WEIGHT: 322 lb (146 kg)
2. A MINIMUM OF 24" CLEARANCE IS RECOMMENDED AROUND THE ENTIRE UNIT. CLEARANCE FOR CONTROL PANEL SHALL BE IN ACCORDANCE WITH OSHA/NEC REQUIREMENTS

SYMBOL LEGEND		DRAWINGS TO CONFORM TO CURRENT REVISION OF THE FOLLOWING ANSI STANDARDS: Y14.3 MULTI AND SECTIONAL VIEW DWGS Y14.5 DIMENSIONING AND TOLERANCING
TOLERANCES, UNLESS OTHERWISE SPECIFIED: 0.XX ± .05; 0.XXX ± .005; ∠ ± 1	SOLID EDGE DRAWING; INCH [mm]	DO NOT SCALE DRAWING FOR DIMENSIONS
		SHEET 1 OF 2 — SCALE 1:7
CONFIDENTIAL DISCLOSURE: This drawing is the property of POWEREX INC. of HARMON HOLDINGS, INC. and is subject to return on demand. Its contents are confidential and must not be copied or submitted to outside parties for use or examination.	AUTHOR: Krishnaprasad,Rakshith	REVISION DATE: 09/22/25 — APPROVALS ON FILE IN PLM
ITEM ID: 764399 MATERIAL: N/A	POWEREX, 150 PRODUCTION DRIVE, HARRISON OH 45030 (888) 769-7979	
DESCRIPTION: 3HP/1P SCROLL TANKMOUNT SIMPLEX 60GH ED	DRAWING NUMBER: STS1302x2	REVISION: A — SIZE: D

STS1302x2

3HP/1P SCROLL TANKMOUNT SIMPLEX 60GH ED

REVISION NOTES	
DESCRIPTION	ECN
INITIAL RELEASE	PXEC0690

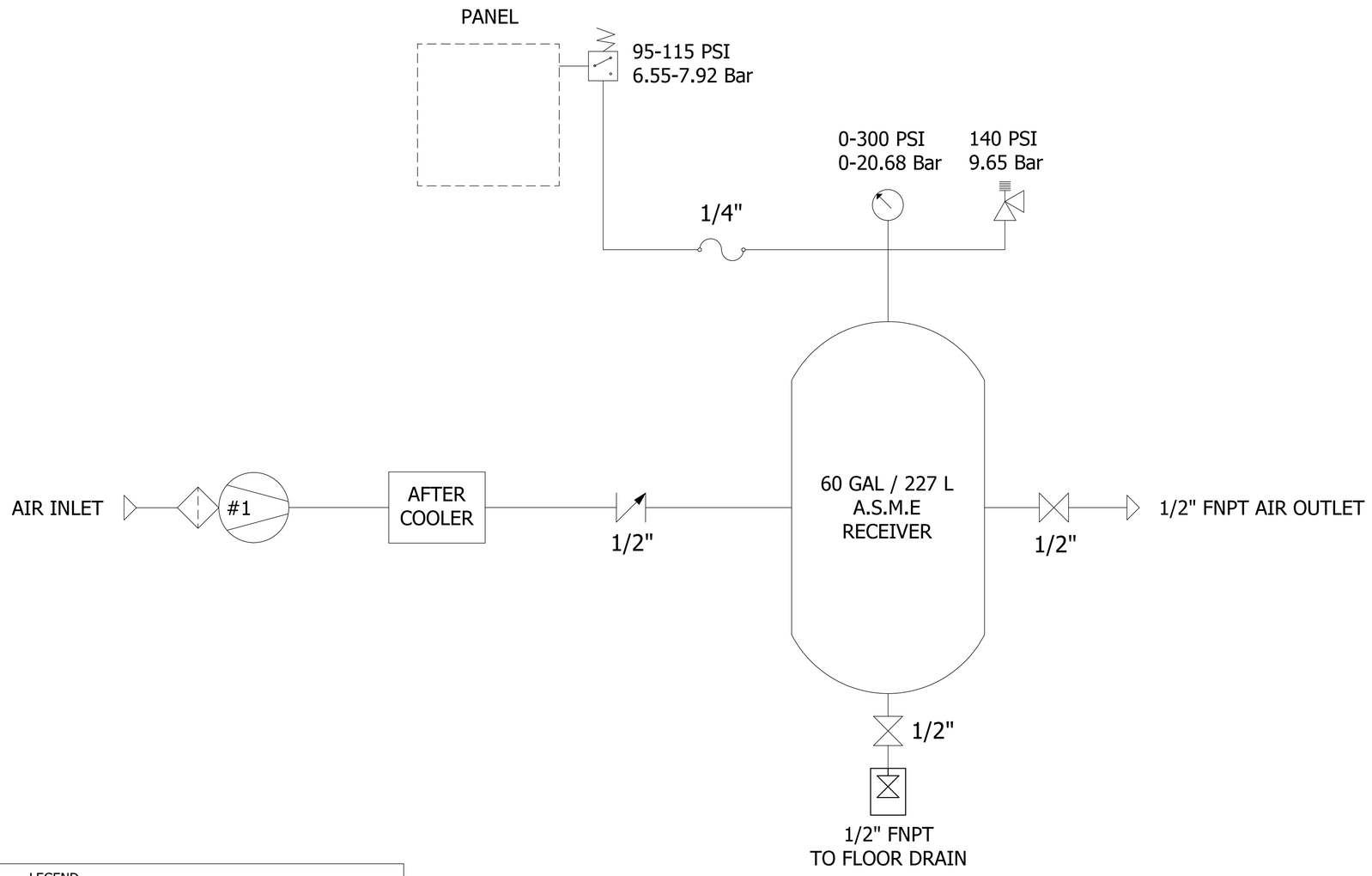

LEGEND		
COMPRESSOR PUMP	INTAKE FILTER	REGULATOR W/ GAUGE
RELIEF VALVE	BALL VALVE	TEMPERTURE SWITCH
CHECK VALVE	UNION	PRESSURE SWITCH/TRANSDUCER
FLEX HOSE	GAUGE	FILTER/SEPERATOR
AIR LINE		
CONDENSATE LINE	SHUTTLE VALVE	ELECTRIC AUTO DRAIN

SYMBOL LEGEND		DRAWINGS TO CONFORM TO CURRENT REVISION OF THE FOLLOWING ANSI STANDARDS: Y14.3 MULTI AND SECTIONAL VIEW DWGS Y14.5 DIMENSIONING AND TOLERANCING
TOLERANCES, UNLESS OTHERWISE SPECIFIED: 0.XX ± .05; 0.XXX ± .005; ∠ ± 1	SOLID EDGE DRAWING	DO NOT SCALE DRAWING FOR DIMENSIONS
	INCH [mm]	SHEET 2 OF 2 — SCALE 1:1

CONFIDENTIAL DISCLOSURE
This drawing is the property of POWEREX INC. of MARMON HOLDINGS, INC., and is subject to return on demand. Its contents are confidential and must not be copied or submitted to outside parties for use or examination.

AUTHOR	REVISION DATE	APPROVALS ON FILE IN PLM
Krishnaprasad,Rakshith	09/22/25	

ITEM ID: 764399
MATERIAL: N/A
DESCRIPTION: 3HP/1P SCROLL TANKMOUNT SIMPLEX 60GH ED

POWEREX®
150 PRODUCTION DRIVE, HARRISON OH 45030
(888) 769-7979

DRAWING NUMBER	REVISION	SIZE
STS1302x2	A	D