STSV0502x2

5HP SCRL TNKMNT SIMP 60GVL ED

REVISION NOTES	
DESCRIPTION	ECN
CHANGED CONDUIT TO ALUMINUM	PXEC0668

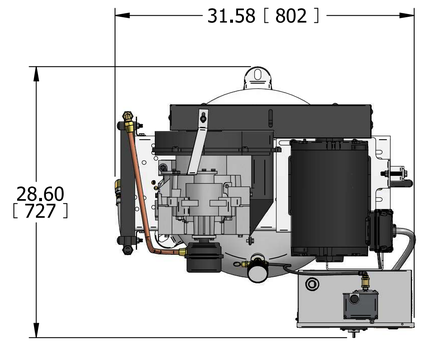

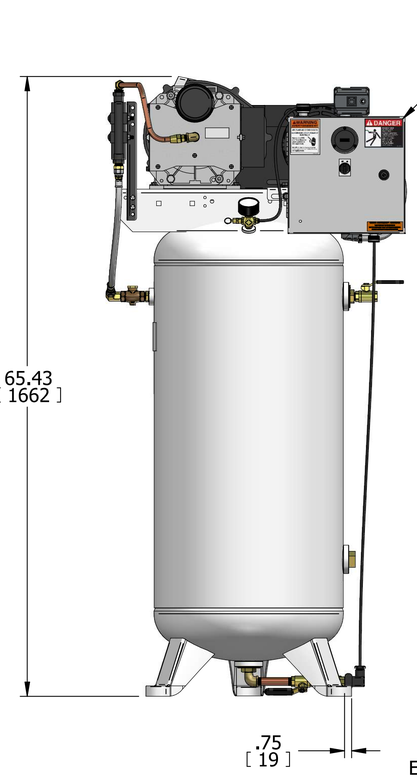

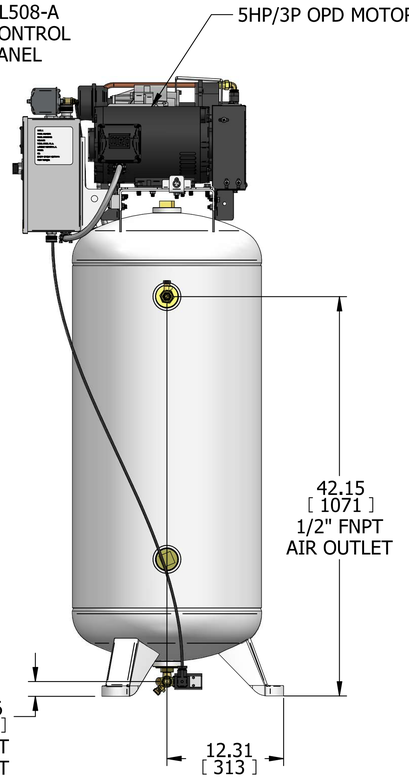

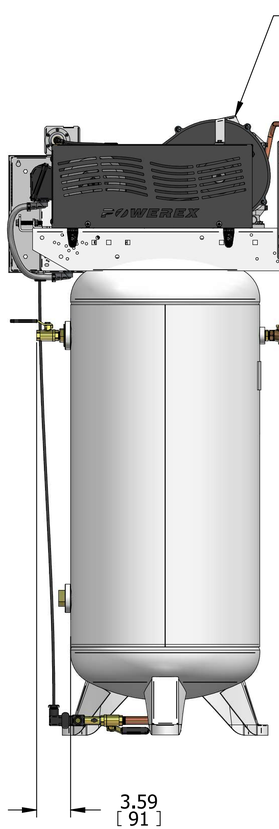



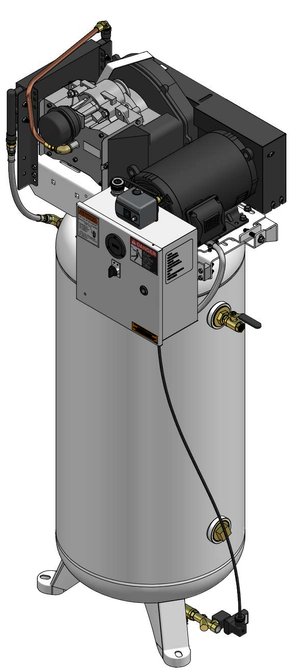

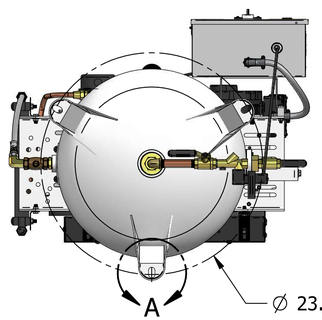

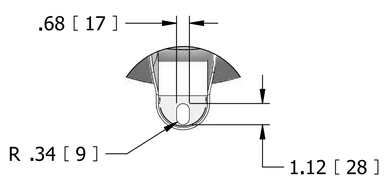

(3X) DETAIL A

NOTES:
1. APPROXIMATE WEIGHT: 334 LBS
2. DIMENSIONS ARE FOR REFERENCE
3. A MINIMUM OF 24" CLEARANCE IS RECOMMENDED AROUND THE ENTIRE UNIT
4. CLEARANCE FOR CONTROL PANEL SHALL BE IN ACCORDANCE WITH OSHA/NEC REQUIREMENTS

SYMBOL LEGEND

DRAWINGS TO CONFORM TO CURRENT REVISION OF THE FOLLOWING ANSI STANDARDS:
Y14.5 MULTI AND SECTIONAL VIEW DWGS
Y14.5 DIMENSIONING AND TOLERANCING

TOLERANCES, UNLESS OTHERWISE SPECIFIED
0.XX ± .05
0.XXX ± .005
∠ ± 1

SOLID EDGE DRAWING

DO NOT SCALE DRAWING FOR DIMENSIONS

INCH [mm]

SHEET 1 OF 2 | SCALE 1:8

CONFIDENTIAL DISCLOSURE
This drawing is the property of POWEREX INC. of MARMON HOLDINGS, INC., and is subject to return on demand. Its contents are confidential and must not be copied or submitted to outside parties for use or examination.

AUTHOR	REVISION DATE	APPROVALS ON FILE IN PLM
Jernigan,Colton	05/28/25	

ITEM ID: 754261
MATERIAL: N/A
DESCRIPTION: 5HP SCRL TNKMNT SIMP 60GVL ED

POWEREX®
150 PRODUCTION DRIVE, HARRISON OH 45030
(888) 769-7979

DRAWING NUMBER	REVISION	SIZE
STSV0502x2	B	D

STSV0502x2

5HP SCRL TNKMNT SIMP 60GVL ED

REVISION NOTES	
DESCRIPTION	ECN
CHANGED CONDUIT TO ALUMINUM	PXEC0668

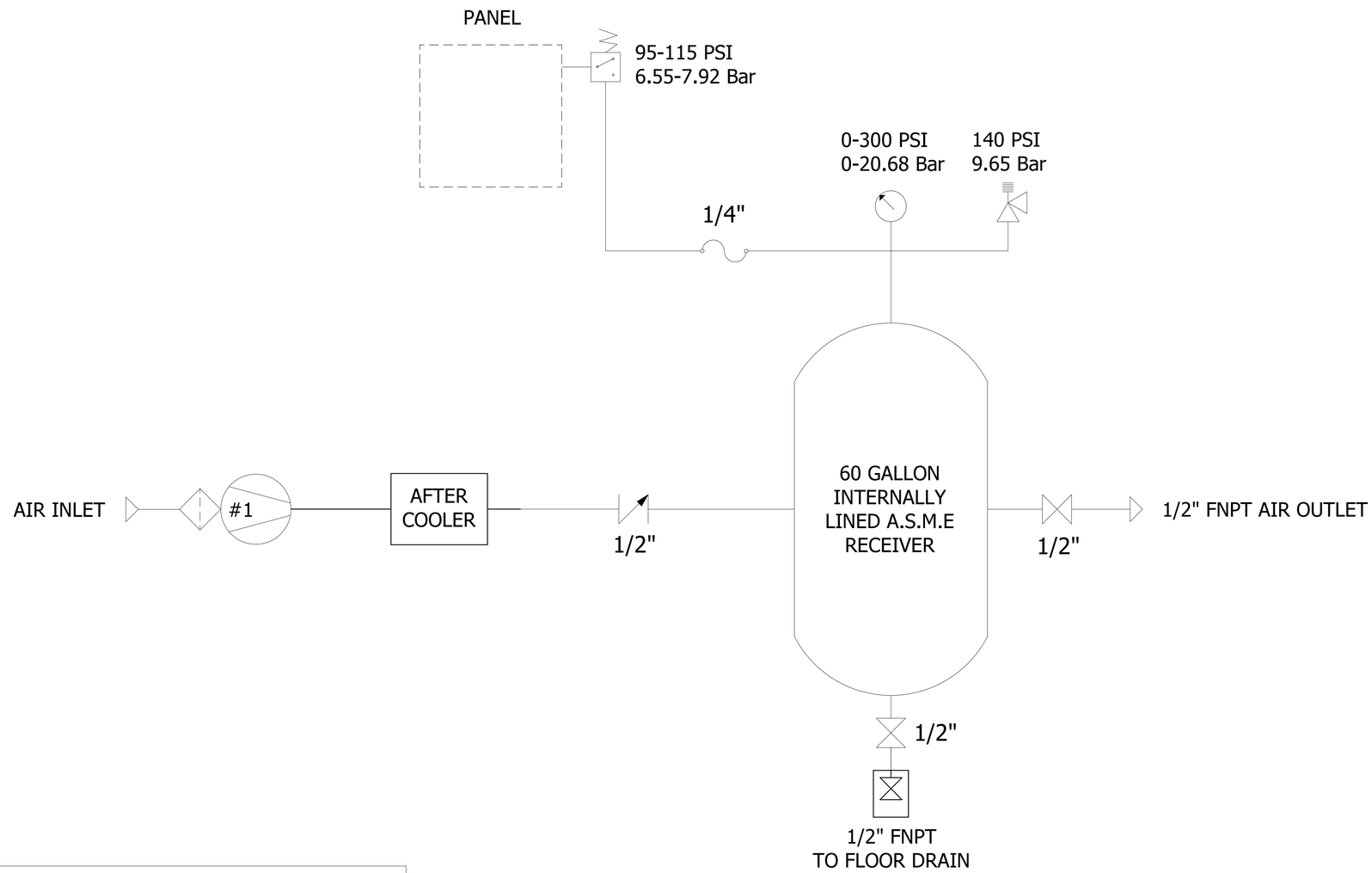

LEGEND		
COMPRESSOR PUMP	INTAKE FILTER	REGULATOR W/ GAUGE
RELIEF VALVE	BALL VALVE	TEMPERTURE SWITCH
CHECK VALVE	UNION	PRESSURE SWITCH/TRANSDUCER
FLEX HOSE	GAUGE	FILTER/SEPERATOR
AIR LINE	SHUTTLE VALVE	ELECTRIC AUTO DRAIN
CONDENSATE LINE		

SYMBOL LEGEND		DRAWINGS TO CONFORM TO CURRENT REVISION OF THE FOLLOWING ANSI STANDARDS: Y14.3 MULTI AND SECTIONAL VIEW DWGS Y14.5 DIMENSIONING AND TOLERANCING
TOLERANCES: UNLESS OTHERWISE SPECIFIED 0.XX ± .05, 0.XXX ± .005, ∠ ± 1	SOLID EDGE DRAWING	DO NOT SCALE DRAWING FOR DIMENSIONS
	INCH [mm]	SHEET 2 OF 2 / SCALE 1:1

CONFIDENTIAL DISCLOSURE
This drawing is the property of POWEREX INC. of MARMON HOLDINGS, INC., and is subject to return on demand. Its contents are confidential and must not be copied or submitted to outside parties for use or examination.

AUTHOR	REVISION DATE	APPROVALS ON FILE IN PLM
Jernigan,Colton	05/28/25	

ITEM ID: 754261
MATERIAL: N/A
DESCRIPTION: 5HP SCRL TNKMNT SIMP 60GVL ED

POWEREX
150 PRODUCTION DRIVE, HARRISON OH 45030
(888) 769-7979

DRAWING NUMBER: STSV0502x2 | REVISION: B | SIZE: D