STSV1302x2

3HP/1P SCRL TNKMNT SIMP 60GVL ED

REVISION NOTES	
DESCRIPTION	ECN
CHANGED CONDUIT TO ALUMINUM	PXEC0668

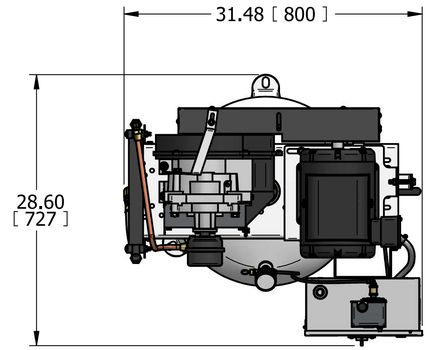

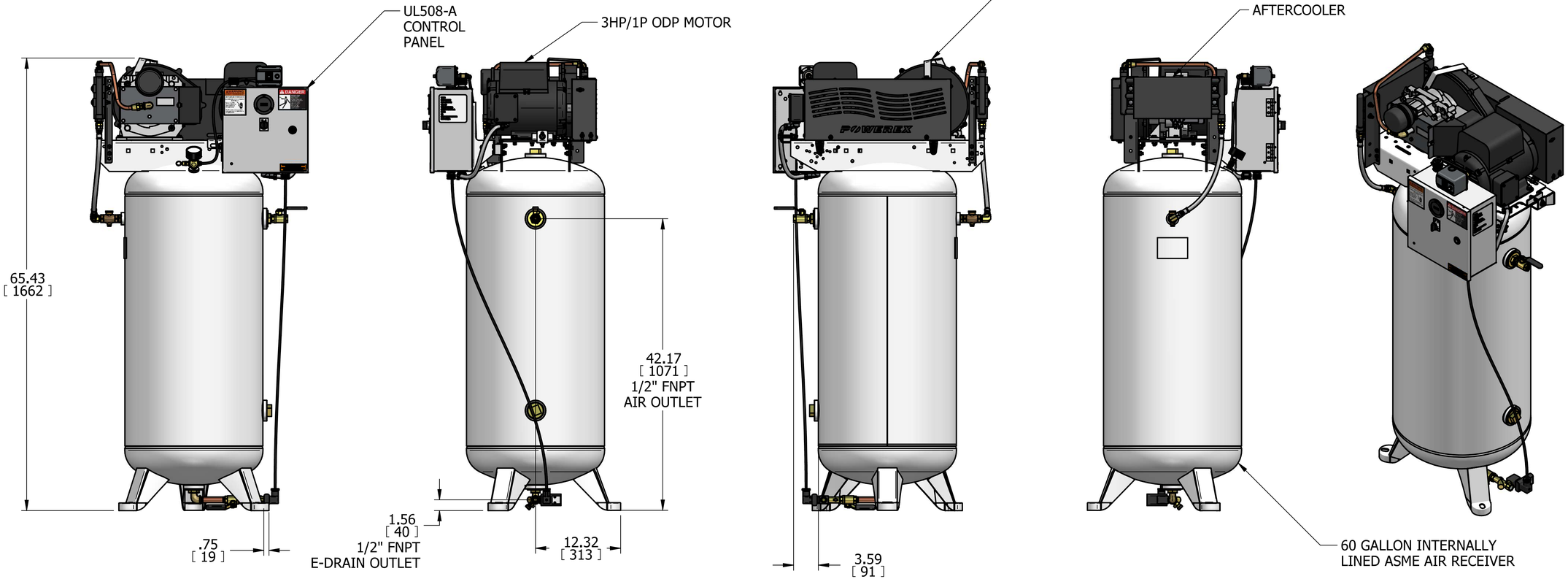

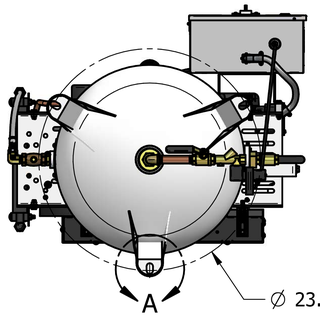

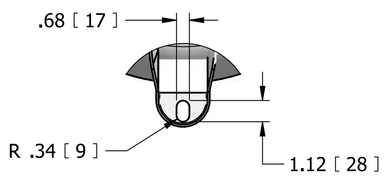

(3X) DETAIL A

NOTES:
1. APPROXIMATE WEIGHT: 305 LBS
2. DIMENSIONS ARE FOR REFERENCE
3. A MINIMUM OF 24" CLEARANCE IS RECOMMENDED AROUND THE ENTIRE UNIT
4. CLEARANCE FOR CONTROL PANEL SHALL BE IN ACCORDANCE WITH OSHA/NEC REQUIREMENTS

SYMBOL LEGEND		DRAWINGS TO CONFORM TO CURRENT REVISION OF THE FOLLOWING ANSI STANDARDS: Y14.3 MULTI AND SECTIONAL VIEW DWGS Y14.5 DIMENSIONING AND TOLERANCING
TOLERANCES: UNLESS OTHERWISE SPECIFIED 0.XX ± .05 0.XXX ± .005 ∠ ± 1	SOLID EDGE DRAWING INCH [mm]	DO NOT SCALE DRAWING FOR DIMENSIONS SHEET 1 OF 2 — SCALE 1:8
CONFIDENTIAL DISCLOSURE This drawing is the property of POWEREX INC. of MARMON HOLDINGS, INC., and is subject to return on demand. Its contents are confidential and must not be copied or submitted to outside parties for use or examination.	AUTHOR: Jernigan,Colton	REVISION DATE: 05/29/25 — APPROVALS ON FILE IN PLM
ITEM ID: 754598 MATERIAL: N/A	POWEREX 150 PRODUCTION DRIVE, HARRISON OH 45030 (888) 769-7979	
DESCRIPTION: 3HP/1P SCRL TNKMNT SIMP 60GVL ED	DRAWING NUMBER: STSV1302x2	REVISION: B — SIZE: D

STSV1302x2

3HP/1P SCRL TNKMNT SIMP 60GVL ED

REVISION NOTES	
DESCRIPTION	ECN
CHANGED CONDUIT TO ALUMINUM	PXEC0668

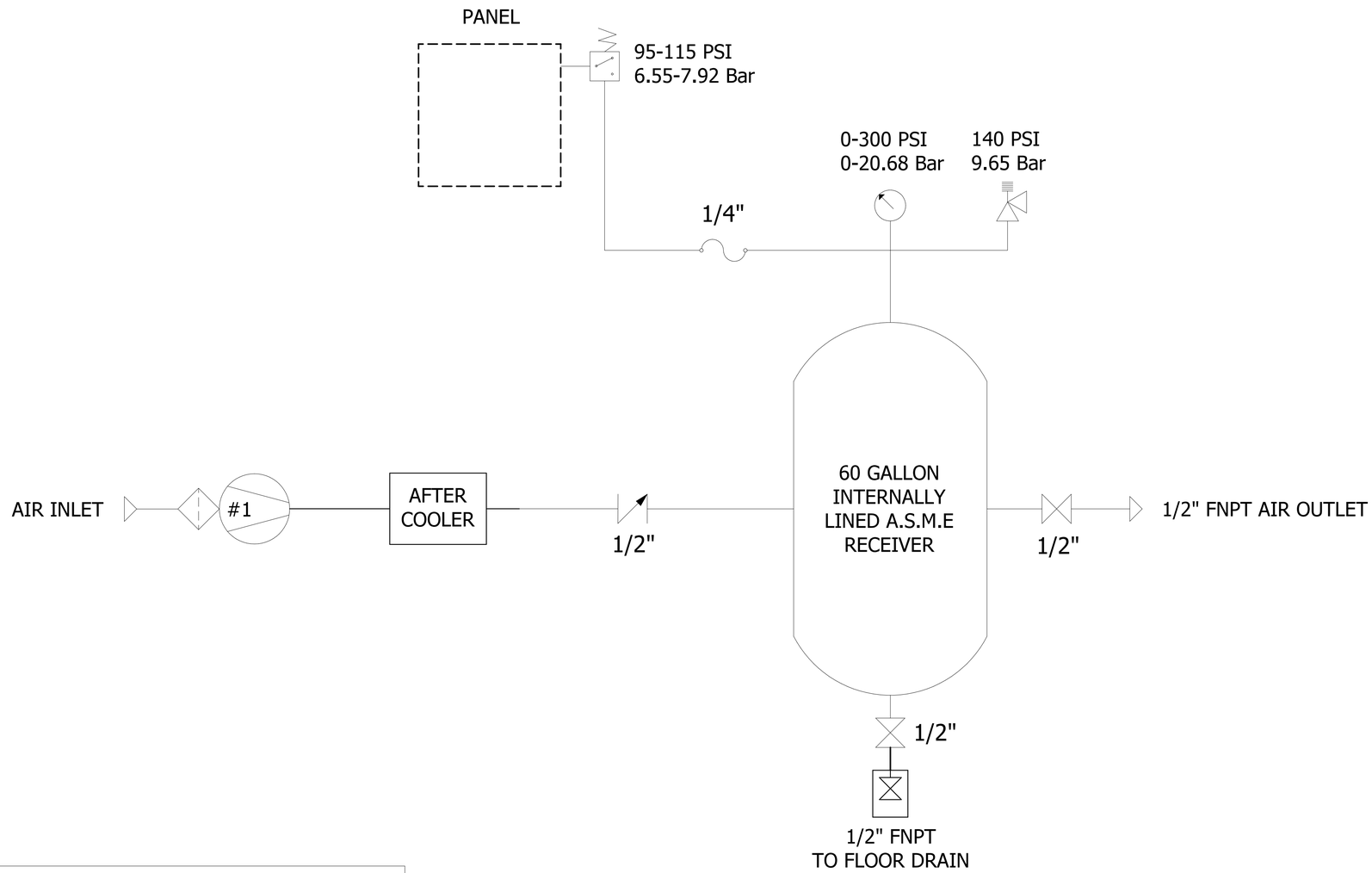

LEGEND

- COMPRESSOR PUMP
- RELIEF VALVE
- CHECK VALVE
- FLEX HOSE
- AIR LINE
- CONDENSATE LINE
- INTAKE FILTER
- BALL VALVE
- UNION
- GAUGE
- SHUTTLE VALVE
- REGULATOR W/ GAUGE
- TEMPERTURE SWITCH
- PRESSURE SWITCH/TRANSDUCER
- FILTER/SEPERATOR
- ELECTRIC AUTO DRAIN

SYMBOL LEGEND		DRAWINGS TO CONFORM TO CURRENT REVISION OF THE FOLLOWING ANSI STANDARDS: Y14.3 MULTI AND SECTIONAL VIEW DWGS Y14.5 DIMENSIONING AND TOLERANCING
TOLERANCES: UNLESS OTHERWISE SPECIFIED 0.XX ± .05, 0.XXX ± .005, ∠ ± 1	SOLID EDGE DRAWING	DO NOT SCALE DRAWING FOR DIMENSIONS
	INCH [mm]	SHEET 2 OF 2 / SCALE 1:1

CONFIDENTIAL DISCLOSURE
This drawing is the property of POWEREX INC. of MARMON HOLDINGS, INC., and is subject to return on demand. Its contents are confidential and must not be copied or submitted to outside parties for use or examination.

AUTHOR	REVISION DATE	APPROVALS ON FILE IN PLM
Jernigan,Colton	05/29/25	

ITEM ID: 754598
MATERIAL: N/A
DESCRIPTION: 3HP/1P SCRL TNKMNT SIMP 60GVL ED

POWEREX
150 PRODUCTION DRIVE, HARRISON OH 45030
(888) 769-7979

DRAWING NUMBER	REVISION	SIZE
STSV1302x2	B	D